PROPOSED MULTI FAMILY RESIDENCES
#778 MAIN STREET
LEICESTER, MA 01524
MAP 21A, LOT 11

OWNER
CHARLTON ROAD REALTY, LLC. 25 WATERVILLE LANE SHREWSBURY, MA 01545
PREPARED FOR
CHARLTON ROAD REALTY, LLC. 25 WATERVILLE LANE SHREWSBURY, MA 01545

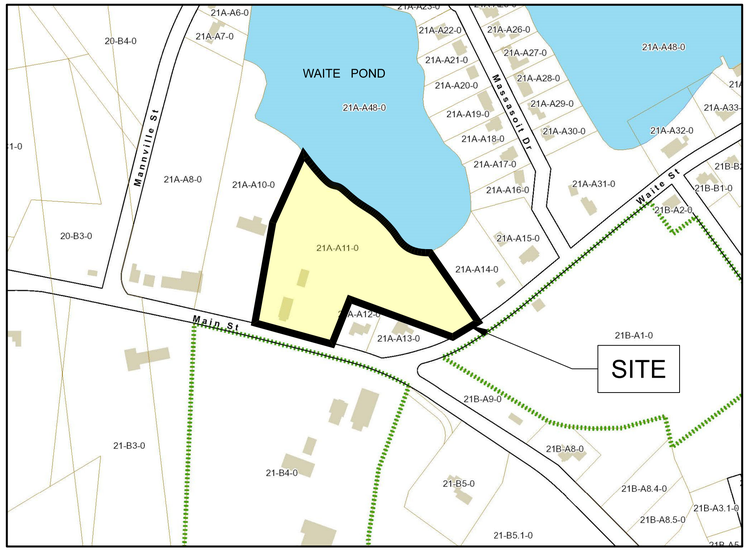

LOCUS MAP

APPROXIMATE SCALE: 1" = 200'

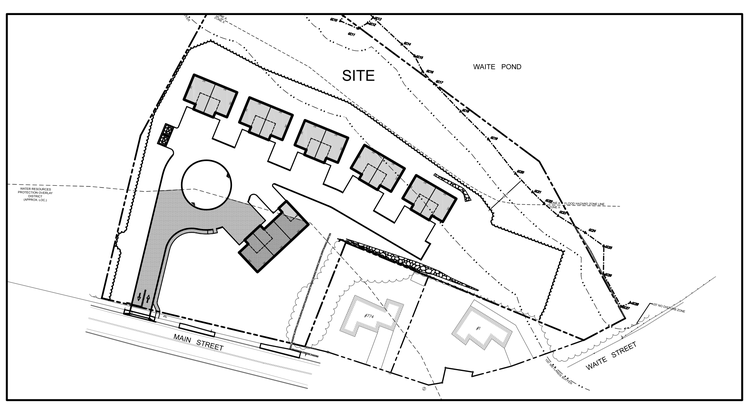

LOCATION PLAN

APPROXIMATE SCALE: 1" = 60'

SHEET #	SHEET NAME
C-1.0	TITLE SHEET
C-2.0	GENERAL NOTES SHEET
1 OF 1	BOUNDARY & TOPOGRAPHIC SURVEY (BY OTHERS)
C-3.0	DEMOLITION PLAN
C-4.0	SITE LAYOUT PLAN
C-5.0	GRADING & DRAINAGE PLAN
C-6.0	UTILITY PLAN
C-7.0	EROSION & SEDIMENT CONTROL PLAN
C-7.1	EROSION & SEDIMENT CONTROL DETAILS
C-8.0	CONSTRUCTION DETAILS
C-8.1	CONSTRUCTION DETAILS
C-8.2	CONSTRUCTION DETAILS
L-1	PLANTING PLAN (BY JCLA)
L-2	PLANTING DETAILS (BY JCLA)
1 OF 1	LIGHTING PLAN

CIVIL ENGINEER:

CMG ENVIRONMENTAL, INC.
67 HALL ROAD
STURBRIDGE, MA 01560
CONTACT: DAVID FAIST, P.E.
(774) 241 - 0901

TRAFFIC ENGINEER:

RON MÜLLER & ASSOCIATES
56 TERESA ROAD
HOPKINTON, MA 01748
(508) 395 - 1576

SURVEYOR:

LEVESQUE GEOMATICS INC
43 GLENDALE ROAD
STURBRIDGE, MA 01518
(508) 868 - 0041

ARCHITECT:

STEVE FLESHMAN ARCHITECT LLC
99 APPLE ROAD
BRIMFIELD, MA 01010
(508) 347 - 7188

REVISIONS

NO.	DATE	DESCRIPTION	BY	CK'D
1.	12/6/2022	ZONING BOARD OF APPEALS SUBMISSION	RL	JAB
2.	1/13/2023	REVISIONS PER PEER REVIEW COMMENTS	RL	JAB
3.	5/12/2023	MODIFIED SITE LAYOUT	MM	JAB

COMMONWEALTH OF MASSACHUSETTS
JAMES A. BERNARDINO
No. 41717
REGISTERED PROFESSIONAL ENGINEER
PROFESSIONAL SEAL

PROJECT:
PROPOSED MULTI FAMILY RESIDENCES
#778 MAIN STREET
LEICESTER, MA 01524

PREPARED FOR:
CHARLTON ROAD REALTY, LLC
25 WATERVILLE LANE
SHREWSBURY, MA 01545

ENGINEERING SERVICES
ENVIRONMENTAL SERVICES
67 Hall Road
Sturbridge, MA 01560
Phone: 774-241-0901
fax: 774-241-0906

CMG EST. 2002

ISSUE DATE: 10/24/2022
DRAWN BY: MM CHECKED BY: JAB
SCALE: AS NOTED
PROJECT NO.: 2021-226

TITLE SHEET

C-1.0

GENERAL NOTES:

1. CONTRACTOR SHALL ADHERE TO AND IS RESPONSIBLE FOR COMPLIANCE WITH ALL DETAILS, NOTES, PLANS AND SPECIFICATIONS CONTAINED HEREIN. IT IS THE RESPONSIBILITY OF THE CONTRACTOR TO ENSURE THAT ALL WORK PERFORMED BY THEIR SUBCONTRACTORS IS IN FULL COMPLIANCE WITH THESE REQUIREMENTS. THE FOLLOWING DOCUMENTS ARE INCORPORATED BY REFERENCE AS PART OF THIS SITE PLAN:
    - "BOUNDARY, TOPOGRAPHIC & UTILITY SURVEY OF MAP 21A, LOT 11" DATED JANUARY 11, 2022 AND PREPARED BY LEVESQUE GEOMATICS INC., 48 GLENDALE ROAD, STURBRIDGE, MA 01518, PHONE: (508) 868-0041.
    - "PROPOSED MULTIFAMILY RESIDENCE, 778 MAIN STREET, LEICESTER, MA 01524" ARCHITECT ELEVATIONS, PREPARED BY STEVE FLESHMAN ARCHITECT LLC, 99 APPLE ROAD, BRIMFIELD, MA 01010, PHONE: (508) 347-7188.
    - "WETLAND BORDER REPORT, 778 MAIN ST., LEICESTER, MA" DATED DECEMBER 27, 2020 AND PREPARED BY GODDARD CONSULTING LLC 291 MAIN STREET, SUITE 8, NORTHBOROUGH, MA 01532, PHONE: (508) 393-3784.
    - "TRAFFIC ASSESSMENT, APARTMENT DEVELOPMENT 778 MAIN STREET, LEICESTER, MASSACHUSETTS", DATED SEPTEMBER 14, 2022 AND PREPARED BY RON MÜLLER & ASSOCIATES, 56 TERESA ROAD HOPKINTON, MA 01748, PHONE: (508) 395-1576.
2. THE CONTRACTOR MUST HAVE COPIES OF ALL PERMITS AND APPROVALS ON SITE AT ALL TIMES. THE CONTRACTOR IS RESPONSIBLE TO ENSURE THAT ALL REQUIRED PERMITS AND APPROVALS HAVE BEEN OBTAINED PRIOR TO PERFORMING ANY WORK ON-SITE OR OFF-SITE. THE CONTRACTOR SHALL THOROUGHLY REVIEW AND UNDERSTAND ALL PERMITS AND PERMIT CONDITIONS, AND NOTIFY THE ENGINEER OF ANY CONFLICT WITH THE DESIGN PLAN PRIOR TO FABRICATION OF ANY MATERIALS OR PRODUCTS TO BE USED AS PART OF THE PROJECT.
3. ALL WORK SHALL BE EXECUTED IN ACCORDANCE WITH THESE PLANS, THE PROJECT'S SPECIFICATIONS, CONDITIONS OF APPROVALS AND PERMITS, AND ALL APPLICABLE RULES, REGULATIONS, CODES, LAWS AND STANDARDS OF ALL AUTHORITIES HAVING JURISDICTION OVER THE PROJECT.
4. THE GEOTECHNICAL REPORT AND RECOMMENDATIONS NOTED HEREIN ARE A PART OF THE CONSTRUCTION PLANS AND DOCUMENTS. IF DISCREPANCY OR AMBIGUITY EXISTS, THE MORE STRINGENT REQUIREMENTS AND/OR RECOMMENDATIONS CONTAINED IN THE PLANS AND THE GEOTECHNICAL REPORT GOVERN. THE CONTRACTOR SHALL IMMEDIATELY NOTIFY THE ENGINEER IN WRITING SHOULD ANY CONFLICTS BE IDENTIFIED PRIOR TO COMMENCING WITH ANY ADDITIONAL WORK. IN THE ABSENSE OF A GEOTECHNICAL REPORT THE STANDARD DOT SPECIFICATIONS FOR ROADWAY CONSTRUCTION (LATEST ADDITION) SHALL GOVERN.
5. CONTRACTOR SHALL FIELD VERIFY ALL EXISTING CONDITIONS AND PROPOSED LAYOUT DIMENSIONS AND MUST NOTIFY CMG ENVIRONMENTAL, INC. IN WRITING IMMEDIATELY IF ACTUAL SITE CONDITIONS DIFFER OR ARE IN CONFLICT WITH THE PROPOSED WORK. NO COMPENSATION WILL BE PAID TO THE CONTRACTOR FOR ADDITIONAL WORK THAT HAS TO BE REDONE OR REPAIRED DUE TO DIMENSIONS OR GRADES SHOWN INCORRECTLY ON THESE PLANS UNLESS THE CONTRACTOR RECEIVES WRITTEN PERMISSION FROM CMG.
6. CONTRACTOR SHALL REFER TO THE ARCHITECTURAL/ BUILDING PLANS FOR ALL BUILDING AND ADJACENT APPURTENANCES FOR EXACT LOCATIONS AND DIMENSIONS SUCH AS ENTRY/ EXIT DOOR LOCATIONS, ELEVATIONS, BUILDING DIMENSIONS, AND EXACT UTILITY CONNECTION LOCATIONS.
7. PRIOR TO PERFORMING ANY WORK ONSITE, THE CONTRACTOR SHALL REVIEW ALL CONSULTANTS PLANS AND SPECIFICATIONS INCLUDING THE ENTIRE SITE PLAN AND THE LATEST ARCHITECTURAL PLANS (INCLUDING, BUT NOT LIMITED TO, STRUCTURAL, MECHANICAL, ELECTRICAL, PLUMBING, AND FIRE SUPPRESSION PLAN, WHERE APPLICABLE). CONTRACTOR MUST IMMEDIATELY NOTIFY ARCHITECT AND SITE ENGINEER IN WRITING OF ANY CONFLICTS, DISCREPANCIES, OR AMBIGUITIES WHICH EXIST.
8. DEBRIS MUST NOT BE BURNED OR BURIED ON SITE AND ALL UNSUITABLE EXCAVATED MATERIAL AND DEBRIS (SOLID WASTE) MUST BE DISPOSED OF IN ACCORDANCE WITH THE PROJECT'S SPECIFICATIONS AND PLANS, AND ALL LOCAL STATE, AND FEDERAL RULES AND REGULATIONS.
9. THE CONTRACTOR IS RESPONSIBLE FOR ALL EXCAVATIONS AND THE DESIGN AND INSTALLATION OF ANY SHORING THAT MAY BE REQUIRED, ALL OF WHICH SHALL BE IN ACCORDANCE WITH CURRENT OSHA STANDARDS. THE CONTRACTOR IS ALSO RESPONSIBLE FOR IMPLEMENTING ANY ADDITIONAL PRECAUTIONS TO PROTECT AND ASSURE STABILITY OF ADJACENT, NEARBY AND CONTIGUOUS STRUCTURES AND PROPERTIES.
10. THE CONTRACTOR SHALL PROTECT AND ASSURE STABILITY OF STRUCTURES (SIDEWALKS AND PAVEMENT, UTILITIES, BUILDINGS, AND INFRASTRUCTURE) ADJACENT TO THE WORK AREA THAT ARE TO REMAIN, AND IMPLEMENT ANY APPROPRIATE MEASURES REQUIRED TO ENSURE STRUCTURAL STABILITY OF THE SAME. CONTRACTOR SHALL ASSURE A SAFE WORK AREA FOR WORKERS, PEDESTRIANS, ANY THIRD PARTY, AND ABUTTING PROPERTIES.
11. THE CONTRACTOR IS RESPONSIBLE FOR ALL "MEANS AND METHODS" NECESSARY TO PREVENT MOVEMENT, SETTLEMENT, OR COLLAPSE OF EXISTING OR PROPOSED STRUCTURES (INCLUDING BUT NOT LIMITED TO DRAINAGE, UTILITIES, PAVEMENT, STRIPING, CURB, ETC.) AND ANY OTHER IMPROVEMENTS THAT ARE TO REMAIN AND SHALL BEAR ANY AND ALL COSTS THAT MAY BE ASSOCIATED WITH THE SAME. IF ANY EXISTING STRUCTURES THAT ARE TO REMAIN ARE DAMAGED DURING DEMOLITIONS, REPAIRS SHALL BE MADE USING NEW PRODUCT/ MATERIALS RESULTING IN A PRE-DEMOLITION CONDITION, OR BETTER. CONTRACTOR IS RESPONSIBLE TO DOCUMENT ALL EXISTING DAMAGE AND NOTIFY THE OWNER AND THE CONSTRUCTION MANAGER PRIOR TO THE START OF CONSTRUCTION.
12. ALL CONCRETE MUST BE AIR ENTRAINED WITH A MINIMUM COMPRESSIVE STRENGTH OF 4,000 PSI AT 28 DAYS UNLESS OTHERWISE SPECIFIED ON THE PLANS, DETAILS, AND/OR GEOTECHNICAL REPORT, OR IN IT'S ABSENCE, THE STANDARD STATE DOT SPECIFICATIONS FOR ROADWAY CONSTRUCTION (LATEST ADDITION) SHALL GOVERN.
13. CMG ENVIRONMENTAL, INC. HAS NO RESPONSIBILITY REGARDING JOB SAFETY AND/OR OVERSIGHT/ SUPERVISION, OR ANYTHING RELATED TO THE SAME, LEGALLY NOR CONTRACTUALLY. AT ANY TIME, CMG ENVIRONMENTAL, INC. IS NOT RESPONSIBLE TO IDENTIFY OR REPORT ANY JOB SAFETY ISSUES.
14. CMG ENVIRONMENTAL, INC. WILL REVIEW CONTRACTOR SUBMITTALS WHICH THE CONTRACTOR IS REQUIRED TO SUBMIT, BUT ONLY FOR THE SOLE PURPOSE OF CHECKING FOR CONFORMANCE WITH THE INTENT OF THE DESIGN AND CONTRACT DOCUMENTS. CMG ENVIRONMENTAL, INC. IS NOT RESPONSIBLE FOR ANY DEVIATION FROM THE CONSTRUCTION DOCUMENTS UNLESS CONTRACTOR RECEIVED EXPLICIT DIRECTION TO DO SO, IN WRITING, FROM CMG ENVIRONMENTAL, INC.
15. THE CONTRACTOR IS RESPONSIBLE FOR IMPLEMENTING AND MAINTAINING A TRAFFIC PROTECTION PLAN FOR ALL WORK THAT AFFECTS PUBLIC TRAVEL EITHER ON AND/OR OFF-SITE. THE COST ASSOCIATED WITH THE PREPARATION AND IMPLEMENTATION OF SAID PLAN SHALL BE INCLUDED IN THE BASE BID/ CONTRACT COST.
16. ALL ONSITE AND OFF-SITE SIGNAGE AND PAVEMENT MARKINGS SHALL CONFORM TO MANUAL IF UNIFORM CONTROL DEVICES OR LOCAL APPROVAL REQUIREMENTS.
17. THE CONTRACTOR SHALL INSTALL AND/OR CONSTRUCT ALL ASPECTS OF THE PROJECT IN STRICT COMPLIANCE WITH AND ACCORDANCE WITH MANUFACTURER'S INSTALLATION STANDARDS, RECOMMENDATIONS AND SPECIFICATIONS, AND IN CASE OF CONFLICT, THE MORE RESTRICTIVE SHALL GOVERN.

GENERAL DEMOLITION NOTES:

1. THE DEMOLITION PLAN IS INTENDED TO PROVIDE ONLY GENERAL INFORMATION REGARDING ITEMS TO BE DEMOLISHED AND/OR REMOVED.
2. THIS PLAN REFERENCES MATERIALS AND DOCUMENTS NOTED HEREIN, IN PARTICULAR BUT NOT LIMITED TO THOSE LISTED IN THE GENERAL NOTES SECTION.
3. CONTRACTOR MUST NOTIFY, IN WRITING, CMG ENVIRONMENTAL, INC., IF THEY HAVE ANY QUESTIONS CONCERNING THE ACCURACY OR INTENT OF THESE PLANS, RELATED SPECIFICATIONS, ANY APPLICABLE SAFETY STANDARDS, OR THE SAFETY OF THE CONTRACTOR OR THIRD PARTIES IN PERFORMING THE WORK ON THIS PROJECT. IF SUCH NOTIFICATION IS GIVEN, NO DEMOLITION OR SITE ACTIVITY MAY BEGIN UNTIL SUCH TIME THAT CMG ENVIRONMENTAL, INC. PROVIDES A WRITTEN RESPONSE TO SAME. ALL DEMOLITION WORK MUST BE PERFORMED IN ACCORDANCE WITH THESE PLANS, THE PROJECT SPECIFICATIONS AND ALL APPLICABLE LOCAL, STATE, AND FEDERAL REGULATIONS.
4. CONTRACTOR SHALL PERFORM ALL WORK IN A SYSTEMATIC AND SAFE MANNER AND IN ACCORDANCE WITH THE REQUIREMENTS OF THE OCCUPATIONAL SAFETY AND HEALTH ACT OF 1970, (29 U.S.C. 651 ET SEQ.), AMENDMENTS TO AND/OR REVISIONS TO SAME.
5. PRIOR TO STARTING ANY SITE ACTIVITY OR DEMOLITION, THE CONTRACTOR SHALL OBTAIN ALL REQUIRED PERMITS (LOCAL, STATE, AND/OR FEDERAL) AND MAINTAIN SAME ON SITE FOR REVIEW BY THE ENGINEER AND OTHER REGULATORY AGENCIES THROUGHOUT THE DURATION OF THE PROJECT.
6. PRIOR TO STARTING ANY SITE ACTIVITY OR DEMOLITION, THE CONTRACTOR SHALL NOTIFY, AT A MINIMUM, THE BUILDING OFFICIAL, CITY ENGINEER, DEPARTMENT OF PUBLIC WORKS, PLANNING AND/OR ZONING COMMISSIONS/BOARDS, THE DESIGN ENGINEER, AND LOCAL WETLAND COMMISSION, 72 HOURS PRIOR TO THE START OF WORK.
7. PRIOR TO STARTING ANY SITE ACTIVITY OR DEMOLITION, THE CONTRACTOR SHALL IMPLEMENT THE SOIL EROSION AND SEDIMENT CONTROL MEASURES AS NOTED ON THE PLANS AND PRIOR TO ANY SITE DISTURBANCE.
8. PRIOR TO STARTING ANY SITE ACTIVITY OR DEMOLITION, THE CONTRACTOR SHALL "CALL BEFORE YOU DIG" AND/OR THE APPLICABLE STATE DAMAGE CONTROL SYSTEM FOR THE REQUIRED UTILITY MARK OUTS IN ADVANCE OF ANY EARTH DISTURBANCE. IN ADDITION TO THIS, THE CONTRACTOR SHALL BE RESPONSIBLE FOR LOCATING AL EXISTING ONSITE UTILITIES INCLUDING BUT NOT LIMITED TO GAS, WATER, ELECTRIC, SANITARY, AND STORM SEWER, TELEPHONE, CABLE, FIBER OPTIC CABLE, ETC. WITHIN AND ADJACENT TO THE LIMITS OF THE WORK.
9. PRIOR TO CONSTRUCTION, THE CONTRACTOR SHALL SECURE THE SITE AS NECESSARY TO PERFORM THE DEMOLITION IN A MANNER AS TO PREVENT THE ENTRY OF UNAUTHORIZED PERSONS.
10. THE CONTRACTOR SHALL PROTECT AND MAINTAIN THE OPERATION AND SERVICE OF ALL ACTIVE UTILITIES AND SYSTEMS THAT ARE NOT BEING REMOVED DURING ALL DEMOLITION ACTIVITIES. SHOULD A TEMPORARY INTERRUPTION OF UTILITY SEVRICES BE REQUIRED AS PART OF THE PROPOSED CONSTRUCTION ACTIVITIES, THE CONTRACTOR SHALL COORDINATE WITH APPROPRIATE UTILITY COMPANIES AND THE AFFECTED END USER TO MINIMIZE IMPACT AND SERVICE INTERRUPTION.
11. THE CONTRACTOR SHALL ARRANGE FOR AND COORDINATE WITH THE APPROPRIATE UTILITY COMPANIES FOR THE TEMPORARY AND PERMANENT TERMINATION OF ANY AND ALL SERVICES THAT ARE REQUIRED FOR THE PROPERTY WHETHER SHOWN ON THE SITE PLANS OR NOT. TERMINATION OF UTILITIES SHALL BE PERFORMED IN COMPLIANCE WITH ALL LOCAL, STATE, AND/OR FEDERAL REGULATIONS.
12. SHOULD HAZARDOUS MATERIAL BE DISCOVERED/ ENCOUNTERED, WHICH WAS NOT ANTICIPATED AND/OR ADDRESSED IN THE PROJECT PLANS AND SPECIFICATIONS, CEASE ALL WORK IMMEDIATELY AND NOTIFY OWNER AND ENGINEER OF RECORD REGARDING THE DISCOVERY OF SAME.
13. CMG ENVIRONMENTAL, INC. HAS NO RESPONSIBILITY REGARDING JOB SAFETY AND/OR OVERSIGHT AND SUPERVISION, OR ANYTHING RELATED TO SAME, LEGALLY NOR CONTRACTUALLY.
14. THE CONTRACTOR IS RESPONSIBLE FOR ALL "MEANS AND METHODS" NECESSARY TO PREVENT MOVEMENT, SETTLEMENT, OR COLLAPSE OF EXISTING STRUCTURES, AND ANY OTHER IMPROVEMENTS THAT ARE TO REMAIN. IF ANY EXISTING STRUCTURES THAT ARE TO REMAIN ARE DAMAGED DURING DEMOLITION, REPAIRS SHALL BE MADE USING NEW PRODUCT/ MATERIALS RESULTING IN A PRE-DEMOLITION CONDITION, OR BETTER. CONTRACTOR IS RESPONSIBLE FOR ALL REPAIR COSTS.
15. ALL BACKFILLING REQUIRED AS A RESULT OF DEMOLITION SHALL BE PERFORMED IN COMPLIANCE WITH THE RECOMMENDATIONS AND GUIDANCE OF THE OF THE GEOTECHNICAL REPORT, OR IN ITS ABSENCE, THE STANDARD STATE DOT SPECIFICATIONS FOR ROADWAY CONSTRUCTION (LATEST EDITION) SHALL GOVERN.
16. THE USE OF EXPLOSIVES FOR THE PURPOSE OF DEMOLITION OR ROCK REMOVAL MUST BE IN COMPLIANCE OF ALL LOCAL, STATE, AND FEDERAL REGULATIONS. THE CONTRACTOR SHALL OBTAIN ALL PERMITS THAT ARE REQUIRED BY THE FEDERAL, STATE, AND FEDERAL REGULATIONS. THE CONTRACTOR IS ALSO RESPONSIBLE FOR ALL INSPECTIONS, MONITORING, OR TESTING AS MAY BE REQUIRED BY ANY AND ALL PERMITS AND REGULATIONS.
17. CONTRACTOR SHALL CONTROL TRAFFIC ON AND OFFSITE IN CONFORMANCE WITH THE CURRENT FHWA "MANUAL ON UNIFORM TRAFFIC CONTROL DEVICES" (MUTCD), AND THE FEDERAL, STATE, AND LOCAL REGULATIONS FOR ALL ASPECTS OF DEMOLITION AND SITE WORK.
18. CMG ENVIRONMENTAL, INC. IS NOT RESPONSIBLE FOR THE MEANS, METHOD, AND/OR PROCEDURES TO BE IMPLEMENTED FOR THE PROJECT. ALL WORK MUST BE IN STRICT ACCORDANCE WITH ALL STATE, FEDERAL, LOCAL, AND JURISDICTIONAL REQUIREMENTS.
19. DEBRIS SHALL NOT BE BURIED ON SITE. ALL DEMOLITION MATERIALS TO BE DISPOSED OF SHALL BE DONE SO IN ACCORDANCE WITH ALL MUNICIPAL, COUNTY, STATE, AND FEDERAL LAWS AND APPLICABLE CODES. THE CONTRACTOR MUST MAINTAIN RECORDS OF ALL DISPOSAL AND TRANSPORT ACTIVITIES INCLUDING DEBRIS AND SOIL REMOVAL.
20. CONTRACTOR MUST PREPARE RECORD DRAWINGS OF ALL SUBTERRANEAN UTILITIES PRIOR TO BURIAL DEPICTING THE LOCATION OF EXISTING UTILITIES THAT ARE CAPPED, ABANDONED IN PLACE, OR RELOCATED AS WELL AS NEW UTILITY SERVICES AND PROVIDE TO THE PROPERTY OWNER AND THE ENGINEER OF RECORD.

GENERAL GRADING & UTILITY NOTES:

1. PRIOR TO STARTING ANY SITE ACTIVITY OR DEMOLITION, THE CONTRACTOR SHALL "CALL BEFORE YOU DIG", "DIG SAFE" AND/OR APPLICABLE STATE DAMAGE CONTROL SYSTEM FOR THE REQUIRED UTILITY MARK OUTS IN ADVANCE OF ANY EARTH DISTURBANCE. IN ADDITION TO THIS, THE CONTRACTOR SHALL BE RESPONSIBLE FOR LOCATING ALL EXISTING ONSITE UTILITIES INCLUDING BUT NOT LIMITED TO GAS, WATER, ELECTRIC, SANITARY AND STORM SEWER, TELEPHONE, CABLE, FIBER OPTIC CABLE, ETC. WITHIN AND ADJACENT TO THE LIMITS OF THE PROJECT ACTIVITIES. LOCATIONS OF ALL EXISTING AND PROPOSED SERVICES ARE APPROXIMATE AND MUST BE INDEPENDENTLY CONFIRMED WITH LOCAL UTILITY COMPANIES AND THE CONTRACTOR. WATER, SANITARY SEWER, AND ALL OTHER UTILITY SERVICE CONNECTION POINTS MUST BE INDEPENDENTLY CONFIRMED BY THE CONTRACTOR IN THE FIELD PRIOR TO THE COMMENCEMENT OF CONSTRUCTION. ALL DISCREPANCIES MUST IMMEDIATELY BE REPORTED IMMEDIATELY IN WRITING TO THE ENGINEER.
2. CONSTRUCTION SHALL BEGIN AT THE LOWEST ELEVATION AND/OR INVERT (POINT OF CONNECTION) AND PROGRESS UPGRADIENT. WHERE UTILITIES ARE PROPOSED TO CROSS/ TRAVERSE EXISTING UNDERGROUND UTILITIES, THE ELEVATIONS OF THE EXISTING UTILITIES SHALL BE VERIFIED IN THE FIELD PRIOR TO CONSTRUCTION BY EXCAVATING A TEST PIT AT THE PROPOSED UTILITY CROSSING POINT TO VERIFY EXISTING UTILITY LOCATIONS, ELEVATIONS, AND/OR INVERTS. SHOULD THE FIELD VERIFIED EXISTING UTILITY BE IN CONFLICT WITH THE PROPOSED SITE DESIGNS, THE CONTRACTOR SHALL NOTIFY THE DESIGN ENGINEER IN WRITING AND SHALL NOT PROCEED WITH SAID UTILITY CONSTRUCTION UNTIL FURTHER DIRECTION IS GIVEN FROM THE DESIGN ENGINEER.
3. THE CONTRACTOR IS RESPONSIBLE FOR REPAIRING ALL DAMAGE TO ANY EXISTING UTILITIES DURING CONSTRUCTION, AT NO COST TO THE OWNER. CONTRACTOR SHALL BEAR ALL COSTS ASSOCIATED WITH DAMAGE TO ANY EXISTING UTILITIES DURING CONSTRUCTION.
4. THE CONTRACTOR IS RESPONSIBLE FOR REVIEWING ALL CONSTRUCTION AND CONTRACT DOCUMENTS INCLUDING, BUT NOT LIMITED TO, ALL OF THE PERMITS AND CONDITIONS, DRAWINGS, REPORTS AND SPECIFICATIONS ASSOCIATED WITH THE PROJECT PRIOR TO MOBILIZATION FOR AND COMMENCEMENT OF CONSTRUCTION. SHOULD THERE BE ANY CONFLICT AND/OR DISCREPANCY BETWEEN ANY OF THE DOCUMENTS, IT IS THE CONTRACTOR'S RESPONSIBILITY TO NOTIFY THE DESIGN ENGINEER IN WRITING OUTLINING SAID CONFLICT AND/OR DISCREPANCY PRIOR TO THE START OF CONSTRUCTION.
5. THE CONTRACTOR MUST INSTALL ALL UTILITIES THAT FUNCTION BY GRAVITY, INCLUDING STORM SEWER AND SANITARY SEWER COMPONENTS, PRIOR TO THE INSTALLATION OF ALL OTHER UTILITIES.
6. CONTRACTOR SHALL REFER TO THE ARCHITECTURAL DESIGN FOR EXACT BUILDING UTILITY CONNECTION LOCATIONS AND SERVICE SIZES, GREASE TRAP REQUIREMENTS/ DETAILS, DOOR ACCESS, AND EXTERIOR GRADING AND REPORT CONFLICT WITH THE SITE PLAN TO THE ENGINEER.
7. THE CONTRACTOR MUST COORDINATE INSTALLATION OF ALL UTILITY'S SERVICES WITH THE INDIVIDUAL SERVICE PROVIDER TO ASSURE INDIVIDUAL INSTALLATION REQUIREMENTS ARE MET. THE CONTRACTOR SHALL ENSURE THAT INSTALLATION OF ALL IMPROVEMENTS COMPLIES WITH ALL UTILITY REQUIREMENTS SET FORTH BY THE JURISDICTION HAVING AUTHORITY AND CONTROL OF SAID UTILITY.
8. WATER SERVICE AND WATER MAIN INSTALLATIONS SHALL BE PER THE SPECIFICATIONS OF THE LOCAL UTILITY COMPANY HAVING JURISDICTION OF THE UTILITY INCLUDING, BUT NOT LIMITED TO PRODUCT MATERIALS AND BURIAL DEPTHS. CONTRACTOR SHALL COORDINATE WITH THE WATER UTILITY COMPANY AND THE ARCHITECT TO ASSURE PROPER WATER METER SIZING PRIOR TO CONSTRUCTION.
9. SERVICES FOR ELECTRICAL, CABLE TV, FIBER OPTIC, TELEPHONE, ETC. SHALL BE INSTALLED UNDERGROUND UNLESS OTHERWISE NOTED ON THE PLANS AND INSTALLED IN ACCORDANCE WITH THE UTILITY SERVICE PROVIDER'S SPECIFICATIONS AND STANDARDS.
10. SITE GRADING, EXCAVATION, FILL, COMPACTION AND MATERIALS USED FOR EARTH WORK AND UTILITY INSTALLATIONS SHALL BE PERFORMED IN ACCORDANCE WITH THESE PLANS, SPECIFICATIONS AND THE REQUIREMENTS SET FORTH IN GEOTECHNICAL REPORT REFERENCED FOR THIS PROJECT OR THE APPROPRIATE UTILITY COMPANY'S SPECIFICATIONS, WHEN GEOTECHNICAL REPORT OR RECOMMENDATIONS HAVE NOT BEEN DEVELOPED, ALL SOILS/ MATERIALS, FILLS, AND COMPACTION SHALL COMPLY WITH THE STANDARD STATE DOT SPECIFICATIONS FOR ROADWAY CONSTRUCTION (LATEST EDITION) AND ANY AMENDMENTS OR REVISIONS THERETO. CMG ENVIRONMENTAL, INC. SHALL HAVE NO LIABILITY OR RESPONSIBILITY FOR OR AS RELATED TO FILL, COMPACTION, AND BACKFILL.
11. THE CONTRACTOR SHALL COMPLY WITH THE LATEST OSHA STANDARD AND REGULATIONS, AS WELL AS ANY LOCAL AUTHORITY THAT MAY HAVE JURISDICTION OVER TRENCHING PROCEDURES. CMG ENVIRONMENTAL, INC. IS NOT RESPONSIBLE FOR ANY MEANS AND METHODS OR PERFORMANCE CRITERIA ASSOCIATED WITH EXCAVATION TRENCHING AND IT IS THE SOLE RESPONSIBILITY OF THE CONTRACTOR APPROPRIATE PROCEDURES ARE ADHERED TO.
12. CONTRACTOR SHALL ADJUST FRAMES, COVERS, AND GRATES OF ALL EXISTING MANHOLES, INLET STRUCTURES, WATER GATE BOXES, AND SANITARY CLEANOUT RISERS AS NECESSARY, TO MATCH PROPOSED GRADES.
13. STORM SEWER PIPE SHALL BE REINFORCED CONCRETE PIPE (RCP) CLASS III WITH SILT TIGHT JOINTS. IF HIGH DENSITY POLYETHYLENE PIPE (HDPE) IS SPECIFIED ON THE PLANS, IT MUST CONFORM TO AASHTO M294 AND TYPE S (SMOOTH INTERIOR WITH ANGULAR CORRUGATIONS) WITH GASKET FOR SILT TIGHT JOINT. ROOF DRAINS MUST BE PVC SDR 26 OR SCHEDULE 40 UNLESS INDICATED OTHERWISE.
14. SANITARY SEWER PIPE SHALL BE POLYVINYL CHLORIDE (PVC) SDR 35 EXCEPT WHERE INDICATED OTHERWISE. SANITARY SEWER LATERAL MUST BE PVC SCHEDULE 40 OR PVC SDR 26 UNLESS INDICATED, IN WRITING, OTHERWISE.
15. PIPE LENGTHS INDICATED FOR SANITARY AND STORM SEWERS ARE MEASURED CENTER OF STRUCTURE TO CENTER OF STRUCTURE.
16. ROOF DRAIN LOCATIONS ARE APPROXIMATE; IT IS THE CONTRACTOR'S RESPONSIBILITY FOR COORDINATING THE RROF CONNECTIONS WITH FINAL ARCHITECTURAL PLAN LOCATIONS.
17. WATER MAIN AND WATER SERVICE PIPING SHALL BE INSTALLED PER THE LOCAL WATER COMPANY'S OR THE AUTHORITY HAVING JURISDICTION SPECIFICATIONS. IN THE ABSENCE OF SUCH SPECIFICATIONS, WATER MAIN PIPING MUST BE CEMENT-LINED DUCTILE IRON (DIP) MINIMUM CLASS 52 THICKNESS MUST COMPLY WITH THE APPLICABLE AWWA STANDARDS IN EFFECT AT THE TIME OF CONSTRUCTION.
18. THE CONTRACTOR SHALL ENSURE THAT ANY AND ALL WORK LOCATED IN THE EXISTING PAVED ROADWAYS AND/OR STREETS BE REPAIRED IN ACCORDANCE WITH THE REFERENCED MUNICIPAL, COUNTY, AND/OR DOT DETAILS AS APPLICABLE. CONTRACTOR IS RESPONSIBLE TO COORDINATE THE PERMITTING, INSPECTION, AND APPROVAL OF COMPLETED WORK WITH THE AGENCY HAVING JURISDICTION OVER THE PROPOSED WORK.
19. THE RELOCATION OF EXISTING AND/OR THE INSTALLATION OF NEW UTILITY POLES AND TRANSFORMERS ARE AT THE SOLE DISCRETION OF UTILITY COMPANIES TO FINALIZE ALL UTILITY SERVICES AND/OR RELOCATIONS TO ASSURE NO CONFLICT WITH THE DESIGN PLANS. SHOULD A CONFLICT ARISE DUE TO THE FINAL DESIGNS OF THE UTILITY COMPANY, THE CONTRACTOR SHALL NOTIFY THE DESIGN ENGINEER IN WRITING AND AWAIT A WRITTEN RESOLUTION PRIOR TO PROCEEDING WITH FURTHER UTILITY INSTALLATIONS.

ADA INSTRUCTIONS TO CONTRACTOR:

1. THE CONTRACTOR SHALL REVIEW THE PROPOSED CONSTRUCTION WITH THE LOCAL BUILDING OFFICIAL PRIOR TO THE START OF CONSTRUCTION.
2. CONTRACTORS SHALL BE PRECISE IN THE CONSTRUCTION OF AMERICANS WITH DISABILITIES ACT (ADA) ACCESSIBLE PARKING, COMPONENTS, AND ACCESS ROUTES FOR THE PROJECT. THESE COMPONENTS SHALL COMPLY WITH ALL APPLICABLE STATE AND LOCAL ACCESSIBILITY LAWS AND REGULATIONS AND THE CURRENT ADA REGULATIONS AND CONSTRUCTION STANDARDS. THESE COMPONENTS INCLUDE, BUT ARE NOT LIMITED TO THE FOLLOWING:
    - PARKING SPACES AND PARKING AISLES SHALL NOT EXCEED A 1:50 (1/4" PER FOOT OR NOMINALLY 2.0%) SLOPE IN ANY DIRECTION
    - CURB RAMPS SHALL NOT EXCEED A 1:12 (8.3%) SLOPE FOR A MAXIMUM LENGTH OF SIX (6) FEET
    - RAMPS SHALL BE EQUIPPED WITH LANDINGS AT EACH END, SHALL NOT EXCEED 1:50 (2.0%) IN ANY DIRECTION, AND HAVE POSITIVE DRAINAGE AWAY FROM THE LANDING.
    - ACCESSIBLE ROUTES SHALL BE A MINIMUM OF 36" WIDE (UNOBSTRUCTED). HANDRAILS AND CAR OVERHANGS MAY NOT OBSTRUCT THESE AREAS. LONGITUDINAL SLOPES (DIRECTION OF TRAVEL) SHALL NOT EXCEED 1:20 (5.0%) AND SHALL HAVE A CROSS SLOPE NO GREATER THAN 1:50 (2.0%)
    - ACCESSIBLE ROUTES EXCEEDING 1:20 (5.0%) SHALL BE CONSIDERED A "RAMP". MAXIMUM SLOPES OF A RAMP SHALL BE 1:12 (8.3%) IN THE DIRECTION OF TRAVEL, AND A CROSS SLOPE OF 1:50 (2.0%). RAMPS SHALL HAVE MAXIMUM RISE OF 2.5 FEET, SHALL BE EQUIPPED WITH HAND RAILS AND LANDINGS AT THE TOPS AND BOTTOM OF THE RAMP. LANDINGS SHALL NOT EXCEED 1:50 (2.0%) IN ANY DIRECTION AND HAVE POSITIVE DRAINAGE AWAY FOR THE LANDING.
    - A LANDING SHALL BE PROVIDED AT THE EXTERIOR OF ALL DOORS. LANDINGS SHALL NOT EXCEED 1:50 (2.0%) IN ANY DIRECTION AND HAVE POSITIVE DRAINAGE AWAY FOR THE LANDING. THE LANDING SHALL BE NO LESS THAN 60 INCHES LONG UNLESS PERMITTED OTHERWISE PER THE ADA REGULATIONS.
3. THE CONTRACTOR SHALL VERIFY ALL EXISTING ELEVATIONS SHOWN ON THE PLAN IN AREAS OF EXISTING DOORWAYS, ACCESSIBLE ROUTES OR OTHER AREAS WHERE RE-CONSTRUCTION IS PROPOSED. THE CONTRACTOR SHALL NOTIFY THE DESIGN ENGINEER OF ANY FIELD CONDITIONS THAT DIFFER IN ANY MANNER FROM WHAT IS SHOWN ON THE PLANS, IN WRITING, BEFORE COMMENCEMENT OF WORK

TYPICAL ABBREVIATIONS

PROP.	PROPOSED	E.O.P.	EDGE OF PAVEMENT	VAC.	VACUUM
EX.	EXISTING	V.G.C.	VERTICAL GRANITE CURB	TRANS.	TRANFORMER
N/F	NOW OR FORMERLY	S.G.C.	SLOPED GRANITE CURB	GEN.	GENERATOR
ND	NOT DETERMINED	C.C.B.	CAPE COD BERM	APPROX. LOC.	APPROXIMATE LOCATION
TBR	TO BE REMOVED	B.C.C.	BITUMINOUS CONCRETE CURB	INV.	INVERT
CONC.	CONCRETE	C.C.	CONCRETE CURB	TBD	TO BE DETERMINED
BIT.	BITUMINOUS	W.G.	WATER GATE	FF	FINISH FLOOR ELEVATION
UP	UTILITY POLE	G.G.	GAS GATE	TF	TOP OF FOUNDATION ELEVATION
L.S.A.	LANDSCAPE AREA	M.E.	MATCH EXISTING	OHD	OVERHEAD DOOR

LEGEND

EXISTING		PROPOSED
	PROPERTY LINE	
	ABUTTING PROPERTY LINE	
	IRON PIPE	
	MONUMENT	
	UTILITY POLE	
	FIRE HYDRANT	
W.G.	WATER GATE	W.G.
W	WATER LINE	W
G.G.	GAS VALVE	G.G.
G	GAS LINE	G
	CATCH BASIN	
	DRAINAGE MAINHOLE	
	DRAINAGE LINE	
	SEWER MANHOLE	
S	SEWER LINE	S
OHW	OVERHEAD ELECTRIC	OHW
UGE	UNDERGROUND ELECTRIC	UGE
50	CONTOUR LINE	50
	SOIL TEST PIT	
	PERCOLATION TEST	
	FENCE	
	TREELINE	
	BOLLARD	
	EDGE OF WETLANDS	
	WETLAND SYMBOL	
	WETLAND BUFFER	
	EROSION CONTROL BARRIER	
	CATCH BASIN PROTECTION	
	LIMIT OF WORK	LOW

REVISIONS

NO.	DATE	DESCRIPTION	BY	CK'D
1.	12/6/2022	ZONING BOARD OF APPEALS SUBMISSION	RL	JAB
2.	1/13/2023	REVISIONS PER PEER REVIEW COMMENTS	RL	JAB
3.	5/12/2023	MODIFIED SITE LAYOUT	MM	JAB

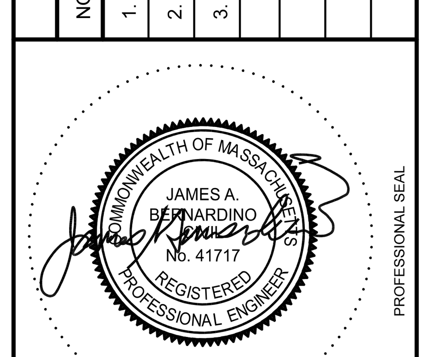

PROFESSIONAL SEAL

PROJECT:

PROPOSED MULTI FAMILY RESIDENCES
#778 MAIN STREET
LEICESTER, MA 01524

PREPARED FOR:

CHARLTON ROAD REALTY, LLC
25 WATERVILLE LANE
SHREWSBURY, MA 01545

CMG EST. 2002
ENGINEERING SERVICES
ENVIRONMENTAL SERVICES
67 Hall Road
Sturbridge, MA 01560
Phone: 774-241-0901
fax: 774-241-0906

ISSUE DATE: 10/24/2022
DRAWN BY: MM | CHECKED BY: JAB
SCALE: NONE
PROJECT NO.: 2021-226

GENERAL NOTES SHEET

C-2.0

NOTES:

1. PROPERTY KNOWN AS MAP 21A, LOT 11 AS SHOWN ON THE TAX MAPS OF THE TOWN OF LEICESTER, WORCESTER COUNTY, COMMONWEALTH OF MASSACHUSETTS.
2. AREA = 140,006 SF OR 3.214 AC.
3. THE BEARING BASIS OF THIS SURVEY REFERS TO THE MASSACHUSETTS STATE PLANE COORDINATE SYSTEM (NAD '83) MAINLAND SYSTEM, BASED ON REAL TIME GPS OBSERVATIONS ON THE MaCORS REAL-TIME NETWORK.
4. THIS PLAN IS BASED ON INFORMATION PROVIDED BY A SURVEY PREPARED IN THE FIELD BY LEVESQUE GEOMATICS INC AND OTHER REFERENCE MATERIAL AS LISTED HEREON.
5. THIS SURVEY WAS PREPARED WITHOUT THE BENEFIT OF A TITLE REPORT AND IS SUBJECT TO THE RESTRICTIONS, COVENANTS AND/OR EASEMENTS THAT MAY BE CONTAINED THEREIN.
6. THE ELEVATIONS SHOWN HEREON REFER TO THE NORTH AMERICAN VERTICAL DATUM OF 1988 BASED ON RTK GPS OBSERVATIONS ON THE MaCORS REALTIME NETWORK AND ARE SUBJECT TO LOCAL BENCHMARK ADJUSTMENT.
7. THE DELINEATION LINE WAS PLACED IN THE FIELD BY GODDARD CONSULTING LLC IN DECEMBER 2021, AND FIELD LOCATED BY LEVESQUE GEOMATICS, INC. ON JANUARY 11, 2022.
8. THE LOCATION OF UNDERGROUND UTILITIES HAVE NOT BEEN SHOWN. UTILITY INFORMATION SHOWN IS LIMITED TO VISIBLE UTILITY HARDWARE AND UTILITY MARKOUTS AT THE SURFACE AND DOES NOT INCLUDE SUCH ITEMS AS SUBSURFACE PIPING, UTILITY LINES, ETC. BEFORE ANY EXCAVATION IS TO BEGIN, UNDERGROUND UTILITIES SHOULD BE VERIFIED BY THE PROPER UTILITY COMPANIES. LEVESQUE GEOMATICS, INC. DOES NOT GUARANTEE THE UTILITIES SHOWN COMPRISE SUCH UTILITIES IN THE AREA EITHER IN SERVICE OR ABANDONED.
9. THE PROPERTY SHOWN IS LOCATED PARTIALLY IN FLOOD HAZARD ZONE A (NO BASE FLOOD ELEVATIONS DETERMINED) AND PARTIALLY IN FLOOD HAZARD ZONE X (AREAS DETERMINED TO BE OUTSIDE THE 0.2% CHANCE ANNUAL FLOODPLAIN) PER THE TOWN OF LEICESTER, PANEL 782 OF 1075 MAP NUMBER 25027C0782E, WITH AN EFFECTIVE DATE OF JULY 4, 2011.

REFERENCES:

1. MAP ENTITLED "LOCATION OF BUILDING, HOWARD G. COOK, 778 MAIN STREET, LEICESTER," DATED JULY 30, 1934 AND FILED IN THE WORCESTER DISTRICT REGISTRY OF DEEDS AS PLAN BOOK 80, PLAN 34.
2. PLAN ENTITLED "1954 STATE HIGHWAY ALTERATION" LAYOUT #4171-3.

LEGEND

124	EXISTING CONTOUR
125	EXISTING CONTOUR
× 123.45	EXISTING SPOT ELEVATION
× TC 123.45	EXISTING TOP OF CURB ELEVATION
× G 122.95	EXISTING GUTTER ELEVATION
× TW 123.45	EXISTING TOP OF WALL ELEVATION
× BW 122.95	EXISTING BOTTOM OF WALL ELEVATION
× DS 123.45	EXISTING DOOR SILL ELEVATION
OH	OVERHEAD WIRES
S	APPROX. LOC. UNDERGROUND SANITARY / SEWER LINE
UP	UTILITY POLE
SMH	SANITARY/SEWER MANHOLE
	DELINEATION FLAG
1.0'	OFFSET OF STRUCTURE AT GROUND LEVEL RELATIVE TO PROPERTY LINE
DYL	DOUBLE YELLOW LINE
SWL	SOLID WHITE LINE
EPLP	ESCUTCHEON PIN LEAD PLUG BOUND

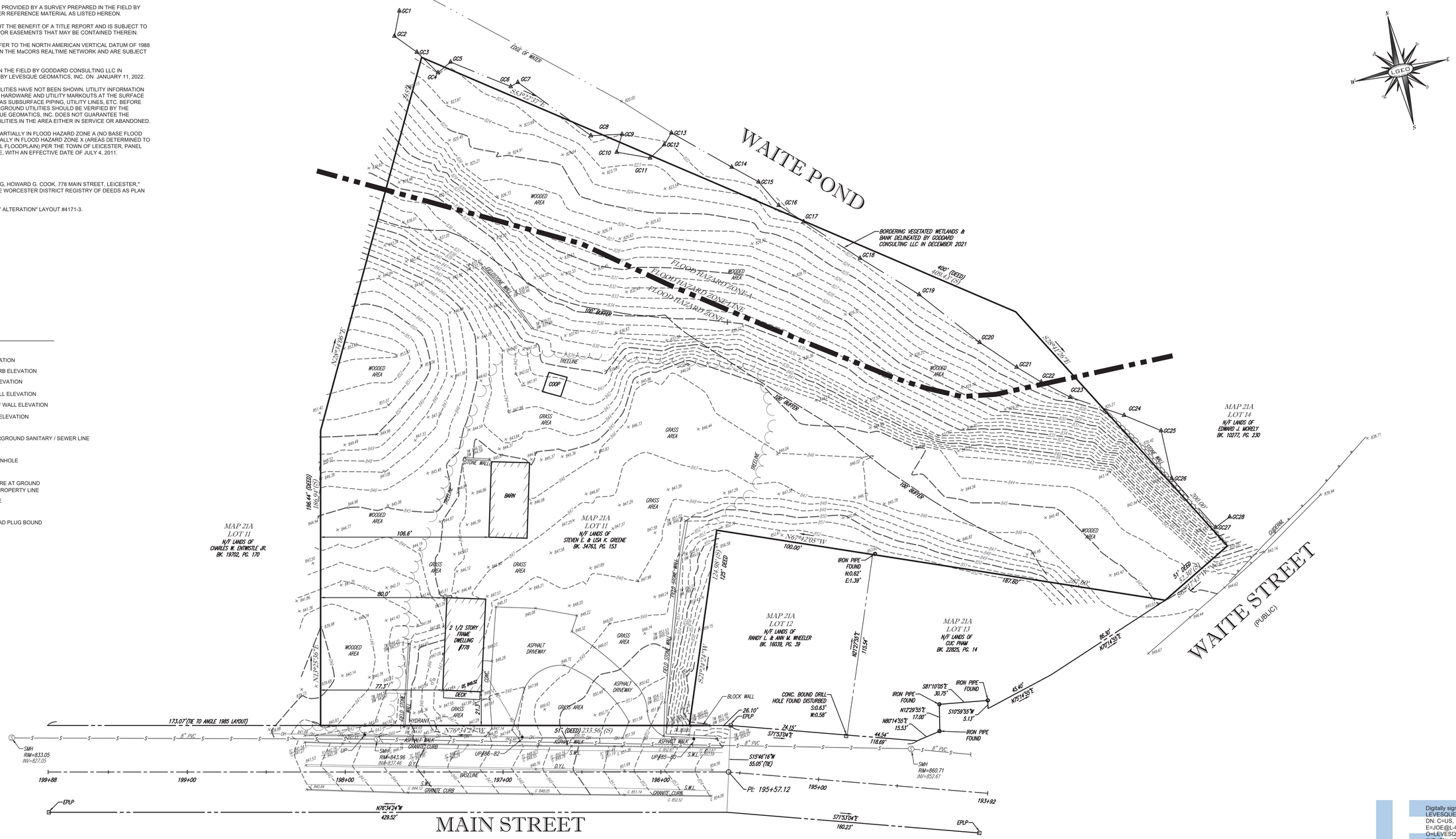

JOSEPH I. LEVESQUE III

Digitally signed by JOSEPH I. LEVESQUE III
DN: C=US, E=JOE@L-GEO.NET, O=LEVESQUE GEOMATICS INC, CN=JOSEPH I. LEVESQUE III
Location: 43 Glendale Road, Sturbridge, MA 01518
Reason: I am the author of this document
Contact Info: 508-868-0041/JOE@L-GEO.NET
Date: 2022.03.01 13:37:12-05'00'

REVISIONS:		
REV	DATE	COMMENT
1		
2		
3		

30 0 15 30 60
GRAPHIC SCALE IN FEET

BOUNDARY, TOPOGRAPHIC & UTILITY SURVEY
OF
MAP 21A, LOT 11
PREPARED FOR CMG ENVIRONMENTAL INC.
778 MAIN STREET
TOWN OF LECEISTER
WORCESTER COUNTY
COMMONWEALTH OF MASSACHUSETTS

PREPARED BY:
LEVESQUE GEOMATICS INC
43 GLENDALE ROAD
STURBRIDGE, MA 01518
PHONE: (508) 868-0041

SEAL:
COMMONWEALTH OF MASSACHUSETTS
JOSEPH I. LEVESQUE III
NO. 53840
REGISTERED PROFESSIONAL LAND SURVEYOR

THIS SURVEY HAS BEEN PERFORMED IN THE FIELD UNDER MY SUPERVISION, AND TO THE BEST OF MY KNOWLEDGE, BELIEF, AND INFORMATION, THIS SURVEY HAS BEEN PERFORMED IN ACCORDANCE WITH CURRENTLY ACCEPTED ACCURACY STANDARDS.

JOSEPH I. LEVESQUE III
MASSACHUSETTS PROFESSIONAL LAND SURVEYOR #53840

SCALE:	1" = 30'
PROJECT #	CMG-016
DATE	JANUARY 11, 2022

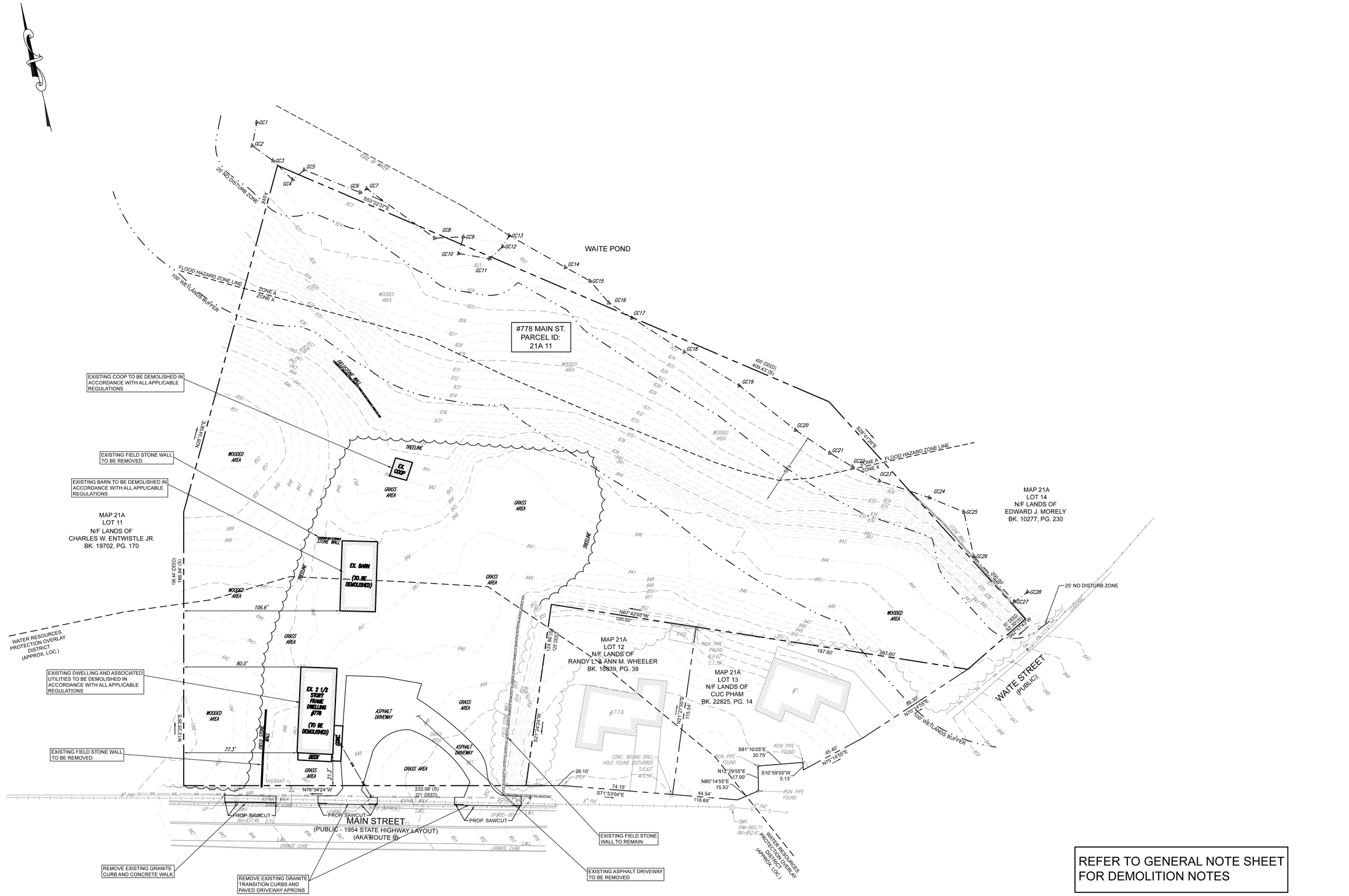

DIG SAFE NOTE (1-888-344-7233):
CONTRACTOR REQUIRED TO NOTIFY "DIG SAFE" 72 HOURS PRIOR TO ANY ON-SITE EXCAVATION OR CONSTRUCTION AT 1-888-344-7233. CONTRACTOR SHALL ALSO NOTIFY LOCAL WATER AND SEWER DEPARTMENTS TO MARK OUT THEIR UTILITIES.

REVISIONS

NO.	DATE	DESCRIPTION	BY	CKD
1.	12/6/2022	ZONING BOARD OF APPEALS SUBMISSION	RL	JAB
2.	1/13/2023	REVISIONS PER PEER REVIEW COMMENTS	RL	JAB
3.	5/12/2023	MODIFIED SITE LAYOUT	MM	JAB

COMMONWEALTH OF MASSACHUSETTS
JAMES A. BERNARDINO
No. 41717
REGISTERED PROFESSIONAL ENGINEER
PROFESSIONAL SEAL

PROJECT:
PROPOSED MULTI FAMILY RESIDENCES
#778 MAIN STREET
LEICESTER, MA 01524

PREPARED FOR:
CHARLTON ROAD REALTY, LLC
25 WATERVILLE LANE
SHREWSBURY, MA 01545

ENGINEERING SERVICES
ENVIRONMENTAL SERVICES
67 Hall Road
Sturbridge, MA 01560
Phone: 774-241-0901
fax: 774-241-0906
CMG EST. 2002

ISSUE DATE: 10/24/2022
DRAWN BY: MM | CHECKED BY: JAB
SCALE: 1" = 20'
PROJECT NO.: 2021-226

DEMOLITION PLAN

C-3.0

SIGN LEGEND:

Ⓐ R1-1 30" STOP SIGN

Ⓑ R4-7aR KEEP RIGHT SIGN

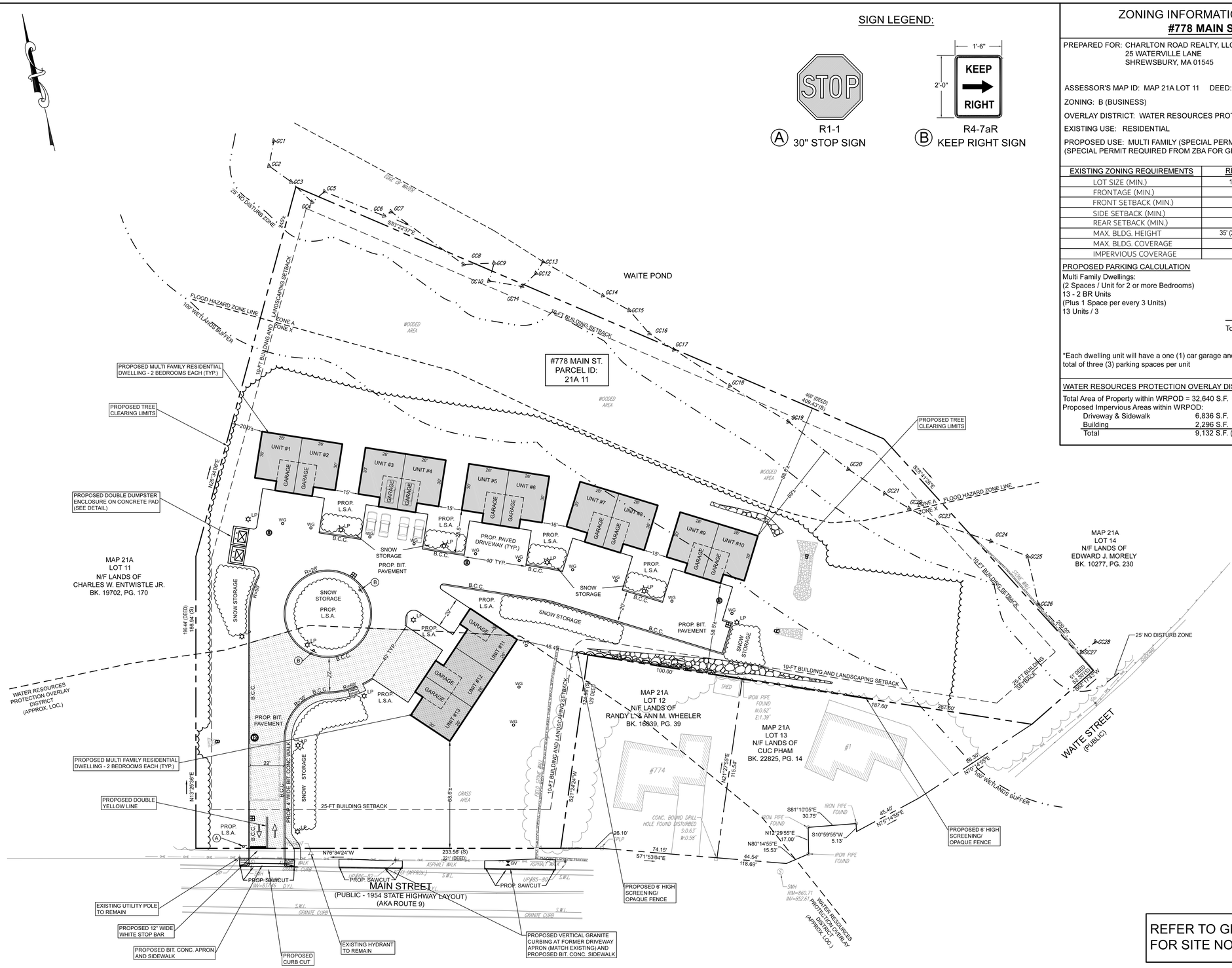

ZONING INFORMATION TABLE - LEICESTER, MA
#778 MAIN STREET, LEICESTER

PREPARED FOR: CHARLTON ROAD REALTY, LLC
25 WATERVILLE LANE
SHREWSBURY, MA 01545

CURRENT OWNER: CHARLTON ROAD REALTY, LLC
25 WATERVILLE LANE
SHREWSBURY, MA 01545

ASSESSOR'S MAP ID: MAP 21A LOT 11 DEED: BK 44,964 PG 320

ZONING: B (BUSINESS)

OVERLAY DISTRICT: WATER RESOURCES PROTECTION OVERLAY DISTRICT

EXISTING USE: RESIDENTIAL

PROPOSED USE: MULTI FAMILY (SPECIAL PERMIT REQUIRED FROM PLANNING BOARD FOR USE)
(SPECIAL PERMIT REQUIRED FROM ZBA FOR GREATER THAN 15% OR 2,500 S.F. OF IMPERVIOUS

EXISTING ZONING REQUIREMENTS	REQUIRED	EXISTING	PROPOSED
LOT SIZE (MIN.)	15,000 S.F.	140,006 S.F. (3.214 Acres)	140,006 S.F. (3.214 Acres)
FRONTAGE (MIN.)	100 FT.	234± FT.	234± FT.
FRONT SETBACK (MIN.)	25 FT.	21.3 FT.	68.6 FT.
SIDE SETBACK (MIN.)	10 FT.	77.3 F.T.	20.0 F.T.
REAR SETBACK (MIN.)	25 FT.	N/A	N/A
MAX. BLDG. HEIGHT	35' (2.5 STORIES)	<35 FT. (2.5 STORIES)	SEE ARCHITECT PLANS
MAX. BLDG. COVERAGE	30%	2,754± S.F. (2%)	11,076 S.F. (7.9%)
IMPERVIOUS COVERAGE	N/A	N/A	---

PROPOSED PARKING CALCULATION

	REQUIRED	PROPOSED
Multi Family Dwellings: (2 Spaces / Unit for 2 or more Bedrooms) 13 - 2 BR Units	26 Spaces	26 Spaces*
(Plus 1 Space per every 3 Units) 13 Units / 3	5 Spaces	13 Spaces*
Total Spaces =	31 Spaces	39 Spaces*

*Each dwelling unit will have a one (1) car garage and a paved driveway which will accomodate two (2) vehicles, for a total of three (3) parking spaces per unit

WATER RESOURCES PROTECTION OVERLAY DISTRICT

Total Area of Property within WRPOD = 32,640 S.F.
Proposed Impervious Areas within WRPOD:

Driveway & Sidewalk	6,836 S.F.
Building	2,296 S.F.
Total	9,132 S.F. (28.0%)

IMPERVIOUS AREA WITHIN WRPOD

REFER TO GENERAL NOTE SHEET FOR SITE NOTES

GRAPHIC SCALE

30 0 15 30 60 120

(IN FEET)
1 inch = 30 ft.

DIG SAFE NOTE (1-888-344-7233):
CONTRACTOR REQUIRED TO NOTIFY "DIG SAFE" 72 HOURS PRIOR TO ANY ON-SITE EXCAVATION OR CONSTRUCTION AT 1-888-344-7233. CONTRACTOR SHALL ALSO NOTIFY LOCAL WATER AND SEWER DEPARTMENTS TO MARK OUT THEIR UTILITIES.

REVISIONS

NO.	DATE	DESCRIPTION	BY	CKD
1.	12/6/2022	ZONING BOARD OF APPEALS SUBMISSION	RL	JAB
2.	1/13/2023	REVISIONS PER PEER REVIEW COMMENTS	RL	JAB
3.	5/12/2023	MODIFIED SITE LAYOUT	MM	JAB

COMMONWEALTH OF MASSACHUSETTS
JAMES A. BERNARDINO
No. 41717
REGISTERED PROFESSIONAL ENGINEER
PROFESSIONAL SEAL

PROJECT:
PROPOSED MULTI FAMILY RESIDENCES
#778 MAIN STREET
LEICESTER, MA 01524

PREPARED FOR:
CHARLTON ROAD REALTY, LLC
25 WATERVILLE LANE
SHREWSBURY, MA 01545

ENGINEERING SERVICES
ENVIRONMENTAL SERVICES
67 Hall Road
Sturbridge, MA 01560
Phone: 774-241-0901
fax: 774-241-0906

CMG EST. 2002

ISSUE DATE: 10/24/2022
DRAWN BY: MM CHECKED BY: JAB
SCALE: 1" = 30'
PROJECT NO.: 2021-226

SITE LAYOUT PLAN

C-4.0

PROPOSED CUT & FILL VOLUMES:

PROPOSED CUT = 3,827 C.Y.
PROPOSED FILL = 2,936 C.Y.
PROPOSED MATERIAL EXPORT = 891 C.Y.

ROOF DRAINAGE NOTE:

1. THE PROPOSED ROOF AREAS SHALL BE EQUIPPED WITH GUTTERS, WHICH FLOW TO DOWNSPOUTS AS SHOWN.
2. PROPOSED ROOF SHALL NOT BE A METAL ROOF.

IMPERVIOUS AREA WITHIN WRPOD

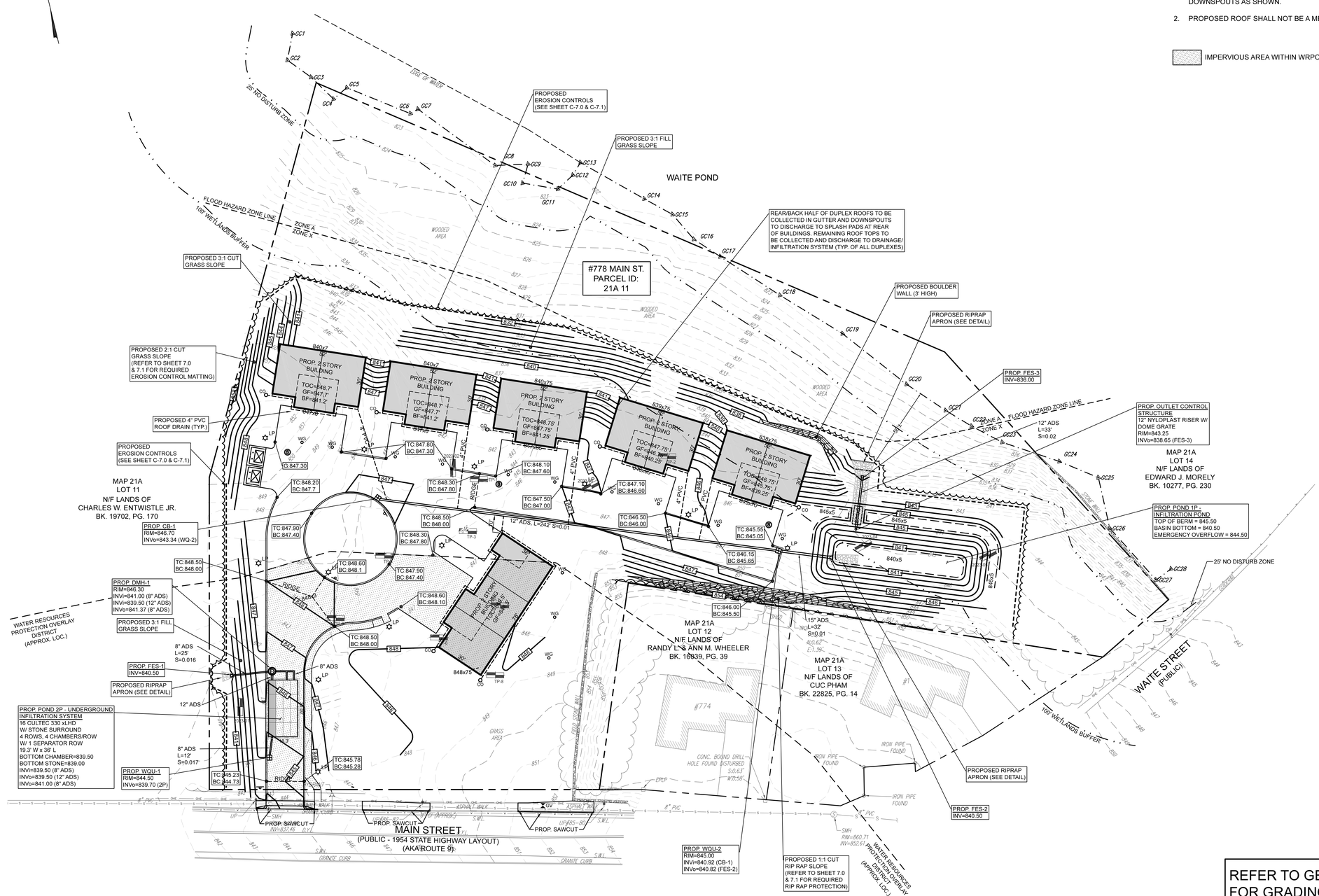

REFER TO GENERAL NOTE SHEET FOR GRADING & DRAINAGE NOTES

GRAPHIC SCALE
30 0 15 30 60 120
(IN FEET)
1 inch = 30 ft.

DIG SAFE NOTE (1-888-344-7233):

CONTRACTOR REQUIRED TO NOTIFY "DIG SAFE" 72 HOURS PRIOR TO ANY ON-SITE EXCAVATION OR CONSTRUCTION AT 1-888-344-7233. CONTRACTOR SHALL ALSO NOTIFY LOCAL WATER AND SEWER DEPARTMENTS TO MARK OUT THEIR UTILITIES.

REVISIONS

NO.	DATE	DESCRIPTION	BY	CKD
1.	12/6/2022	ZONING BOARD OF APPEALS SUBMISSION	RL	JAB
2.	1/13/2023	REVISIONS PER PEER REVIEW COMMENTS	RL	JAB
3.	5/12/2023	MODIFIED SITE LAYOUT	MM	JAB

COMMONWEALTH OF MASSACHUSETTS
JAMES A. BERNARDINO
No. 41717
REGISTERED PROFESSIONAL ENGINEER
PROFESSIONAL SEAL

PROJECT:
PROPOSED MULTI FAMILY RESIDENCES
#778 MAIN STREET
LEICESTER, MA 01524

PREPARED FOR:
CHARLTON ROAD REALTY, LLC
25 WATERVILLE LANE
SHREWSBURY, MA 01545

ENGINEERING SERVICES
ENVIRONMENTAL SERVICES
67 Hall Road
Sturbridge, MA 01560
Phone: 774-241-0901
fax: 774-241-0906
CMG EST. 2002

ISSUE DATE: 10/24/2022
DRAWN BY: MM CHECKED BY: JAB
SCALE: 1" = 30'
PROJECT NO.: 2021-226

GRADING & DRAINAGE PLAN

C-5.0

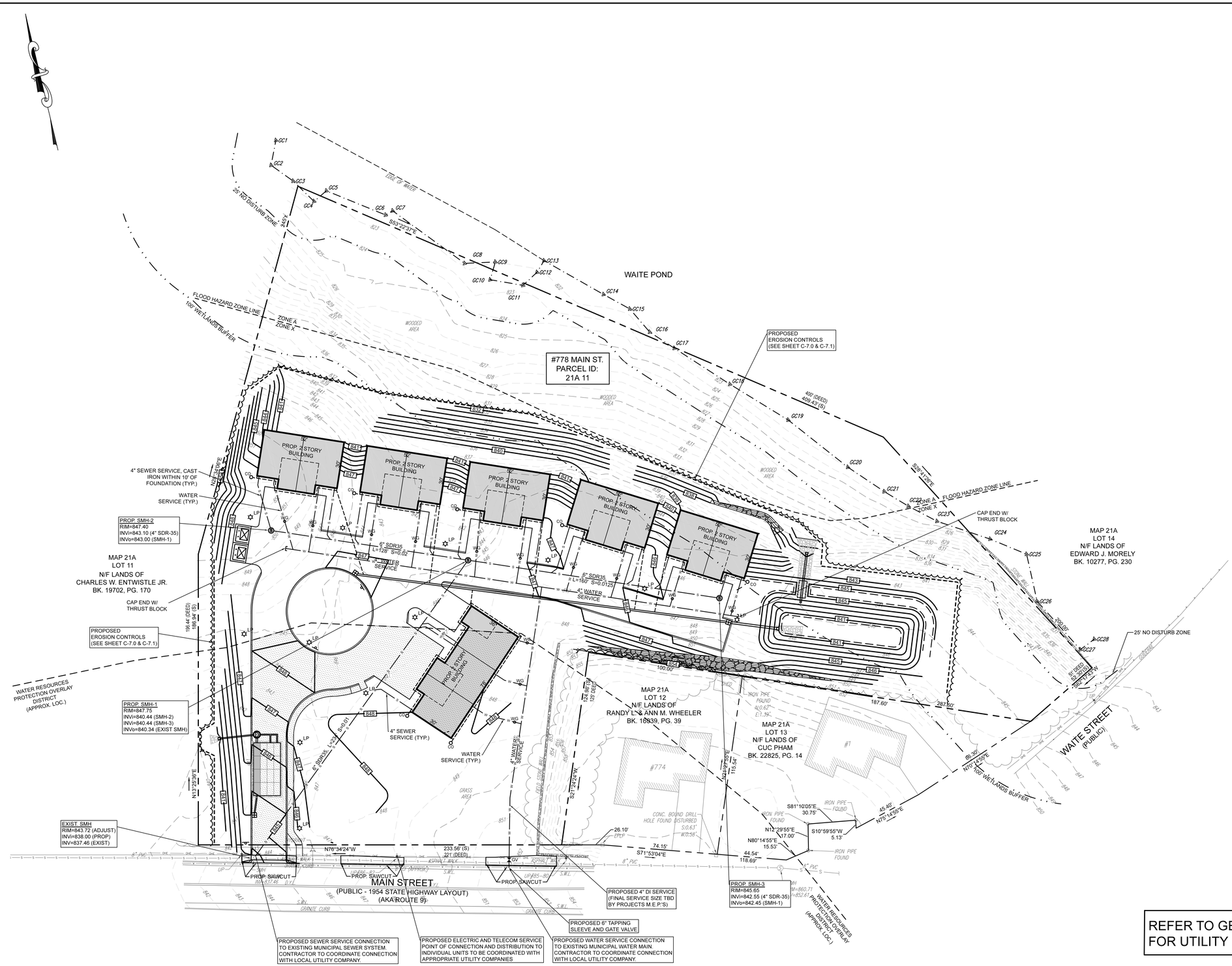

CONTACTS:

LEICESTER HIGHWAY DEPARTMENT
BRIAN KNOTT - FOREMAN
59 PETER SALEM ROAD
LEICESTER, MA 01524
PHONE: (508) 892-7021

LEICESTER WATER SUPPLY DISTRICT
JOSEPH H. WOOD - SUPERINTENDENT
124 PINE STREET, P.O. BOX 86
LEICESTER, MA 01524
PHONE: (508) 892-8484
FAX: (508) 892-1812

LEICESTER FIRE DEPARTMENT
MICHAEL DUPUIS - FIRE CHIEF
3 PAXTON STREET
LEICESTER, MA 01524
PHONE: (508) 892-7022 EXT. 1102
FAX: (508) 892-7044

LEICESTER POLICE DEPARTMENT
KEN ANTANAVICA - CHIEF OF POLICE
90 SOUTH MAIN STREET
LEICESTER, MA 01524
PHONE: (508) 892-7099 EXT.2010
FAX: (508) 892-7012

IMPERVIOUS AREA WITHIN WRPOD

REFER TO GENERAL NOTE SHEET FOR UTILITY NOTES

GRAPHIC SCALE

30 0 15 30 60 120

(IN FEET)
1 inch = 30 ft.

DIG SAFE NOTE (1-888-344-7233):
CONTRACTOR REQUIRED TO NOTIFY "DIG SAFE" 72 HOURS PRIOR TO ANY ON-SITE EXCAVATION OR CONSTRUCTION AT 1-888-344-7233. CONTRACTOR SHALL ALSO NOTIFY LOCAL WATER AND SEWER DEPARTMENTS TO MARK OUT THEIR UTILITIES.

REVISIONS

NO.	DATE	DESCRIPTION	BY	CKD
1.	12/6/2022	ZONING BOARD OF APPEALS SUBMISSION	RL	JAB
2.	1/13/2023	REVISIONS PER PEER REVIEW COMMENTS	RL	JAB
3.	5/12/2023	MODIFIED SITE LAYOUT	MM	JAB

COMMONWEALTH OF MASSACHUSETTS
JAMES A. BERNARDINO
No. 41717
REGISTERED PROFESSIONAL ENGINEER
PROFESSIONAL SEAL

PROJECT:
PROPOSED MULTI FAMILY RESIDENCES
#778 MAIN STREET
LEICESTER, MA 01524

PREPARED FOR:
CHARLTON ROAD REALTY, LLC
25 WATERVILLE LANE
SHREWSBURY, MA 01545

ENGINEERING SERVICES
ENVIRONMENTAL SERVICES
67 Hall Road
Sturbridge, MA 01560
Phone: 774-241-0901
fax: 774-241-0906

CMG EST. 2002

ISSUE DATE: 10/24/2022
DRAWN BY: MM CHECKED BY: JAB
SCALE: 1" = 30'
PROJECT NO.: 2021-226

UTILITY PLAN

C-6.0

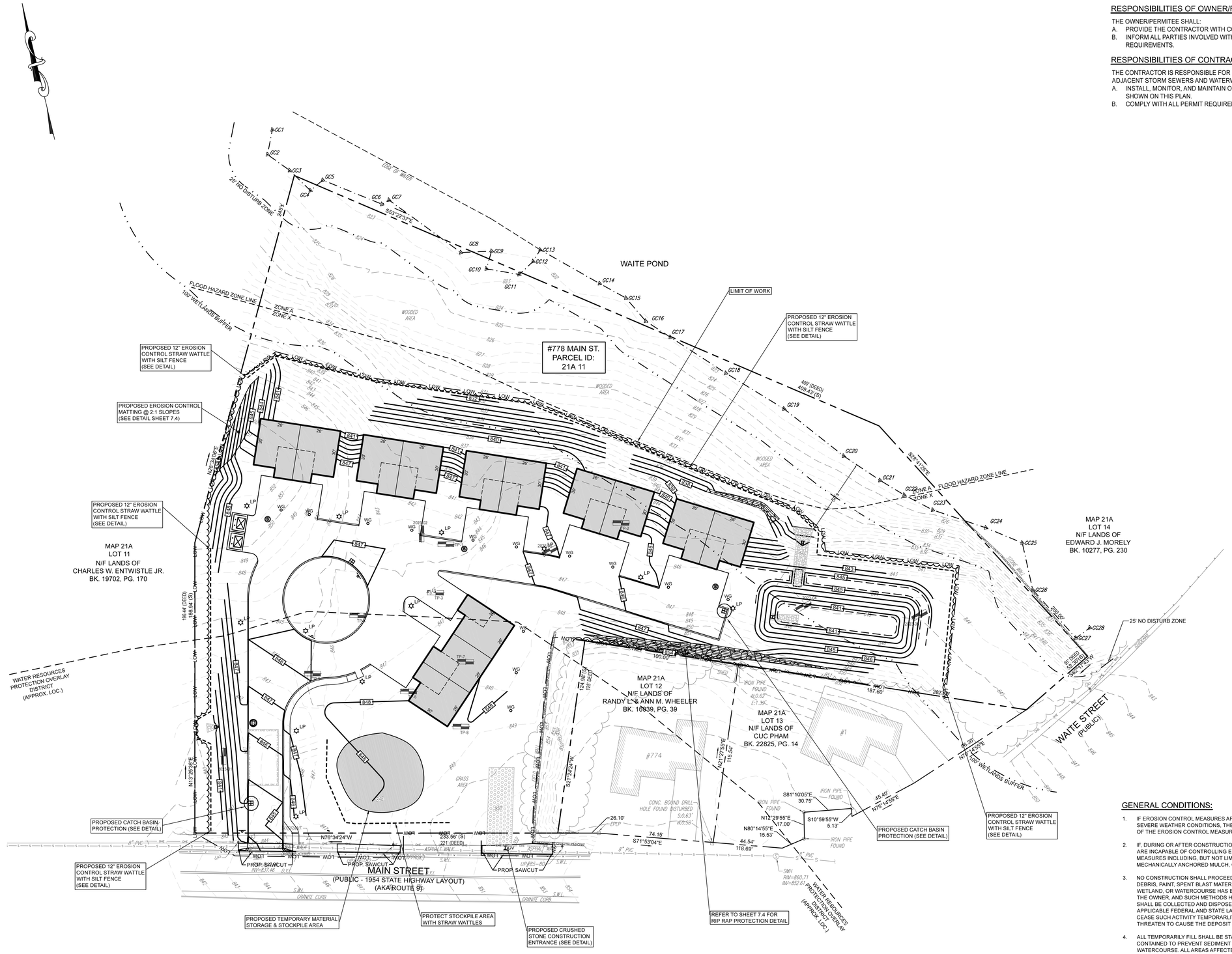

RESPONSIBILITIES OF OWNER/PERMITEE

THE OWNER/PERMITEE SHALL:

A. PROVIDE THE CONTRACTOR WITH COPIES OF LAND-USE PERMITS THAT OWNER HAS ACQUIRED.
B. INFORM ALL PARTIES INVOLVED WITH THE PROPSOED SITE WORK OF THIS PLAN'S OBJECTIVES AND REQUIREMENTS.

RESPONSIBILITIES OF CONTRACTOR

THE CONTRACTOR IS RESPONSIBLE FOR PREVENTING EROSION OF THE SITE AND FOR PROTECTING ADJACENT STORM SEWERS AND WATERWAYS FROM SEDIMENTATION.

A. INSTALL, MONITOR, AND MAINTAIN OF THE SOIL EROSION AND SEDIMENT CONTROL MEASURES AS SHOWN ON THIS PLAN.
B. COMPLY WITH ALL PERMIT REQUIREMENTS.

GENERAL CONDITIONS:

1. IF EROSION CONTROL MEASURES ARE DAMAGED BY CONSTRUCTION VEHICLES, ACTS OF VANDALISM, OR SEVERE WEATHER CONDITIONS, THE CONTRACTOR SHALL IMMEDIATELY REMOVE SEDIMENT IN THE VICINITY OF THE EROSION CONTROL MEASURES AND REPAIR THESE MEASURES TO A FUNCTIONAL CONDITION.

2. IF, DURING OR AFTER CONSTRUCTION, IT BECOMES APPARENT THAT EXISTING EROSION CONTROL MEASURES ARE INCAPABLE OF CONTROLLING EROSION, THE ENGINEER OR THE CITY MAY REQUIRE ADDITIONAL CONTROL MEASURES INCLUDING, BUT NOT LIMITED TO; ADDITIONAL WATTLES, SILT FENCE, SEDIMENT BASINS, MECHANICALLY ANCHORED MULCH, OR ENHANCED DEWATERING FILTRATION.

3. NO CONSTRUCTION SHALL PROCEED UNTIL A WRITTEN PROPOSAL OF METHODS TO PREVENT CONSTRUCTION DEBRIS, PAINT, SPENT BLAST MATERIALS, OR OTHER MATERIALS FROM ENTERING A STORM SEWER, THE WETLAND, OR WATERCOURSE HAS BEEN SUBMITTED BY THE CONTRACTOR TO THE OWNER AND APPROVED BY THE OWNER, AND SUCH METHODS HAVE BEEN IMPLEMENTED AS THE OWNER DIRECTS. THESE MATERIALS SHALL BE COLLECTED AND DISPOSED OF IN AN ENVIRONMENTALLY SAFE MANNER IN ACCORDANCE WITH ALL APPLICABLE FEDERAL AND STATE LAWS AND REGULATIONS. THE OWNER MAY ORDER THE CONTRACTOR TO CEASE SUCH ACTIVITY TEMPORARLIY IF, IN THE JUDGEMENT OF THE OWNER, WIND OR STORM CONDITIONS THREATEN TO CAUSE THE DEPOSIT OF SUCH MATERIALS INTO A WATERWAY.

4. ALL TEMPORARILY FILL SHALL BE STABILIZED DURING USE TO PREVENT EROSION AND SHALL BE SUITABLY CONTAINED TO PREVENT SEDIMENT OR OTHER PARTICULATE MATTER FROM RENTERING A WETLAND OR WATERCOURSE. ALL AREAS AFFECTED BY TEMPORARY FILLS MUST BE RESTORED TO THEIR ORIGINAL CONTOURS OR AS DIRECTED BY THE OWNER, AND REVEGETATED. THE AREAL EXTENT OF TEMPORARY FILL OR EXCAVATION SHALL BE CONFINED TO THAT AREA NECESSARY TO PERFORM THE WORK, AS APPROVED BY THE OWNER.

5. DUMPING OF OIL, CHEMICALS OR OTHER DELETERIOUS MATERIALS ON THE GROUND IS FORBIDDEN. THE CONTRACTOR SHALL PROVIDE A MEANS OF CATCHING, RETAINING, AND PROPERLY DISPOSING OF DRAINED OIL, REMOVED OIL FILTERS, OR OTHER DELETERIOUS MATERIAL. ALL SPILLS OF SUCH MATERIALS SHALL BE REPORTED IMMEDIATELY BY THE CONTRACTOR TO APPROPRIATE CITY AND STATE AGENCIES.

6. EPA-NPDES STORMWATER POLLUTION PREVENTION PLAN (SWPPP) FOR CONSTRUCTION ACTIVITIES IS REQUIRED.

7. INSPECTIONS: EROSION CONTROL SHALL BE INSPECTED WEEKLY OR AFTER A STORM EVENT WITH 0.25" PRECIPITATION ACCUMULATION. INSPECTION SHALL BE RECORDED IN A LOG ALONG WITH TIME AND DATE. LOG SHALL BE AVAILABLE FOR INSPECTION BY THE TOWN OFFICIALS UPON REQUEST.

GRAPHIC SCALE

30 0 15 30 60 120

(IN FEET)
1 inch = 30 ft.

DIG SAFE NOTE (1-888-344-7233):

CONTRACTOR REQUIRED TO NOTIFY "DIG SAFE" 72 HOURS PRIOR TO ANY ON-SITE EXCAVATION OR CONSTRUCTION AT 1-888-344-7233. CONTRACTOR SHALL ALSO NOTIFY LOCAL WATER AND SEWER DEPARTMENTS TO MARK OUT THEIR UTILITIES.

REVISIONS

NO.	DATE	DESCRIPTION	BY	CK'D
1.	12/6/2022	ZONING BOARD OF APPEALS SUBMISSION	RL	JAB
2.	1/13/2023	REVISIONS PER PEER REVIEW COMMENTS	RL	JAB
3.	5/12/2023	MODIFIED SITE LAYOUT	MM	JAB

COMMONWEALTH OF MASSACHUSETTS
JAMES A. BERNARDINO
No. 41717
REGISTERED PROFESSIONAL ENGINEER

PROFESSIONAL SEAL

PROJECT:
PROPOSED MULTI FAMILY RESIDENCES
#778 MAIN STREET
LEICESTER, MA 01524

PREPARED FOR:
CHARLTON ROAD REALTY, LLC
25 WATERVILLE LANE
SHREWSBURY, MA 01545

ENGINEERING SERVICES
ENVIRONMENTAL SERVICES
67 Hall Road
Sturbridge, MA 01560
Phone: 774-241-0901
fax: 774-241-0906

CMG EST. 2002

ISSUE DATE: 10/24/2022
DRAWN BY: MM CHECKED BY: JAB
SCALE: 1" = 30'
PROJECT NO.: 2021-226

EROSION & SEDIMENT CONTROL PLAN

C-7.0

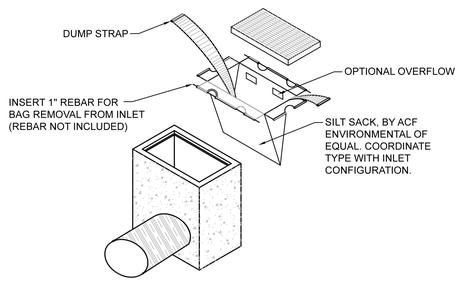

SILT SACK DETAIL

NOT TO SCALE

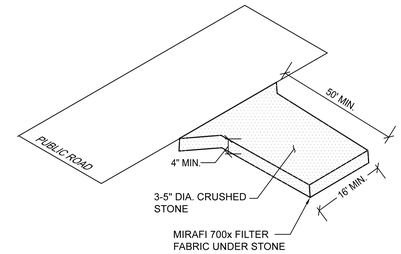

CONSTRUCTION EXIT DETAIL

NOT TO SCALE

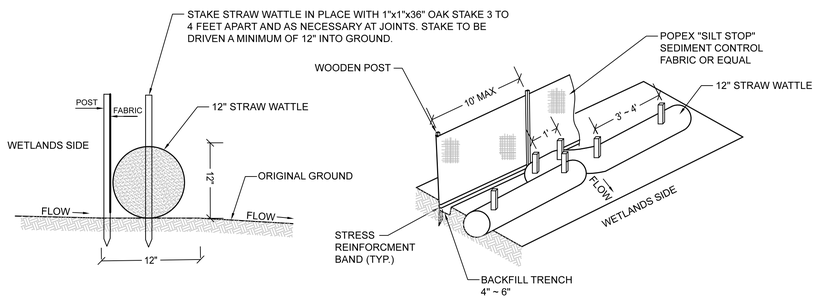

STRAW WATTLE DETAIL

NOT TO SCALE

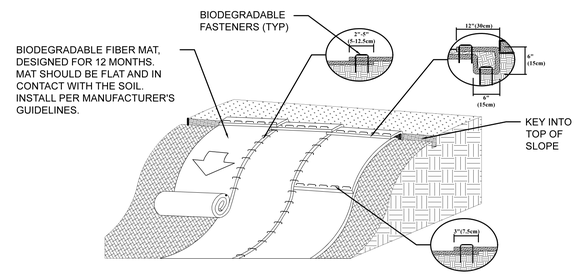

EROSION CONTROL BLANKET DETAIL

NOT TO SCALE

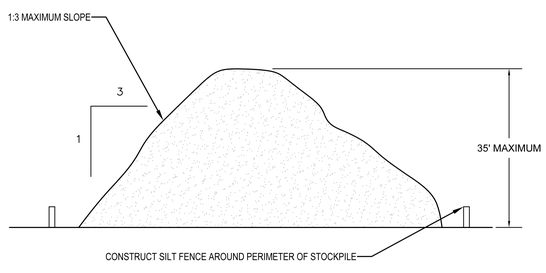

TEMPORARY STOCKPILE

NOT TO SCALE

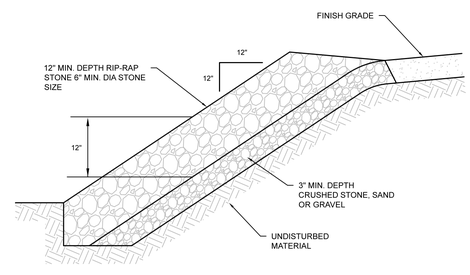

1:1 RIP-RAP SLOPE PROTECTION DETAIL

NOT TO SCALE

DIG SAFE NOTE (1-888-344-7233):
CONTRACTOR REQUIRED TO NOTIFY "DIG SAFE" 72 HOURS PRIOR TO ANY ON-SITE EXCAVATION OR CONSTRUCTION AT 1-888-344-7233. CONTRACTOR SHALL ALSO NOTIFY LOCAL WATER AND SEWER DEPARTMENTS TO MARK OUT THEIR UTILITIES.

PROPOSED SEQUENCE OF CONSTRUCTION:

1. CONDUCT A PRE-CONSTRUCTION MEETING WITH APPLICABLE TOWN STAFF, PEER REVIEW CONSULTANTS, AND ENGINEER OF RECORD.
2. OBTAIN ALL APPLICABLE PERMITS FROM THE TOWN AND STATE BEFORE STARTING ANY WORK ON THE SITE.
3. INSTALL EROSION CONTROLS AS SHOWN ON THE PLAN AND DETAILS.
4. DISCONNECT APPLICABLE UTILITIES AND SERVICES TO THE EXISTING CAR WASH FACILITY. ONCE UTILITIES ARE PROPERLY TERMINATED, CONTRACTOR MAY DEMOLISH EXISTING SITE FEATURES SHOWN ON THE DEMOLITION PLAN.
5. ROUGH GRADE THE SITE AS SHOWN ON THE GRADING AND DRAINAGE PLAN.
6. CONSTRUCT THE PROPOSED CAR WASH FACILITY PER THE SITE PLAN.
7. INSTALL ALL SUBSURFACE UTILITIES AND STORMWATER CONVEYANCE/ TREATMENT STRUCTURES.
8. FINALIZE PROPOSED SITE IMPROVEMENTS PER THE APPROVED SITE PLAN. INSTALL GROUND COVER TREATMENT PER THE LANDSCAPE PLAN TO STABILIZE ANY DISTURBED AREAS.
9. COORDINATE FINAL APPROVALS WITH ENGINEER OF RECORD & APPLICABLE TOWN DEPARTMENTS. AS-BUILT SURVEY AND INSPECTIONS WILL BE REQUIRED PRIOR TO FINAL APPROVAL BY THE TOWN DEPARTMENTS.
10. REMOVE ALL EROSION CONTROL MEASURES FROM THE SITE AND PROPERLY DISPOSE OF MEASURES OFF-SITE.

DESCRIPTION AND MAINTENACE OF EROSION CONTROL MEASURES:

TEMPORARY STABILIZATION MEASURES

SILT FENCING WITH STRAW WATTLES OR APPROVED EQUAL:
INSTALL SILT FENCE/ STRAW WATTLES AT VARIOUS LOCATIONS AS SHOWN ON THE PLANS AND DETAILS. EMBED THE SILT FENCE AND WATTLES INTO THE GROUND AND FIRMLY ANCHOR IT AS SHOWN IN THE DETAILS. REMOVE SEDIMENT ONCE LEVELS HAVE REACHED 1/4 OF THE EFFECTIVE FENCE-HEIGHT. REPAIR AND OR/ REPLACE IMMEDIATELY IF DAMAGED OR DETERIORATED.

CONSTRUCTION ENTRANCE:
PLACE 1 ~ 3" STONE ON A GEOTEXTILE FILTER FABRIC ALONG A STABLE FOUNDATION. ENTRANCE SHALL BE INSPECTED WEEKLY OR AFTER A HEAVY RAIN EVENT. MUD AND SEDIMENT TRACKED OR WASHED ONTO THE PUBLIC ROADWAY MUST BE REMOVED IMMEDIATELY. ONCE MUD AND SOIL PARTICLES CLOG THE VOIDS IN THE GRAVEL, THE PAD SHOULD BE TOP DRESSED WITH STONE. RESHAPE PAD AS NEEDED FOR DRAINAGE AND RUNOFF CONTROL.

SILT SACK DROP INLET PROTECTION:
SILT SACK OR APPLICABLE FABRIC DROP INLET PROTECTION DEVICE SHALL BE INSTALLED PER THE MANUFACTURER'S SPECIFICATIONS. TRAPPING DEVICES AND STRUCTURES THEY PROTECT SHOULD BE INSPECTED AFTER EVERY RAIN STORM AND REPAIRS MADE AS NECESSARY. SEDIMENT SHOULD BE REMOVED FROM THE TRAPPING DEVICES AFTER THE SEDIMENT HAS REACHED A MAXIMUM OF ONE HALF THE DEPTH OF THE TRAP.

TEMPORARY STABILIZATION:
TOP SOIL STOCKPILES AND DISTURBED PORTIONS OF THE SITE WHERE CONSTRUCTION ACTIVITY CEASES FOR AT LEAST 21 DAYS WILL BE STABILIZED WITH TEMPORARY SEED AND MULCH NO LATER THAN 14 DAYS FROM THE LAST CONSTRUCTION ACTIVITY IN THAT AREA. THE TEMPORARY SEED AND MULCH PROCEDURES AND SPECIFICATIONS SHALL BE IN ACCORDANCE WITH THE LANDSCAPE ARCHITECT'S RECOMMENDATIONS. AREAS OF THE SITE WHICH ARE TO BE PAVED WILL BE TEMPORARILY STABILIZED BY APPLYING GEOTEXTILE AND STONE SUB-BASE UNTIL BITUMINOUS PAVEMENT CAN BE APPLIED.

DUST CONTROL:
TAKE PRECAUTIONS TO PREVENT DUST FROM BECOMING A NUISANCE TO ABUTTING PROPERTY OWNERS. BROOM OFF PAVEMENTS ADJOINING THE EXCAVATION ON A DAILY BASIS. COVER AND/OR KEEP MOIST ALL EARTH STOCKPILES AT ALL TIMES. USE CALCIUM CHLORIDE TO CONTROL DUST OVER CERTAIN AREAS OF THE SITE, AS DIRECTED BY THE ENGINEER OR SHOWN ON THE PLANS. CALCIUM CHLORIDE SHALL CONFORM TO ASTM D-98, TYPE I. THE CONTRACTOR SHALL MAINTAIN AND INSPECT, ON A DAILY BASIS, THE ADEQUACY OF DUST CONTROL MEASURES AND CORRECT ANY DEFICIENCIES IMMEDIATELY.

STOCKPILING OR STORAGE OF EXCAVATED MATERIALS:
COMPLETELY SURROUND TEMPORARY MATERIAL STOCKPILES WITH SILT FENCE TO PREVENT TRANSPORTATION OF SEDIMENT.

PERMANENT STABILIZATION MEASURES

DISTURBED PORTIONS OF THE SITE WHERE CONSTRUCTION ACTIVITIES PERMANENTLY CEASE SHALL BE STABILIZED WITH PERMANENT SEED NO LATER THAN 14 DAYS AFTER THE LAST CONSTRUCTION ACTIVITY. THE PERMANENT SEED AND MULCH SPECIFICATIONS AND PROCEDURE SHALL BE IN ACCORDANCE WITH THE LANDSCAPE ARCHITECT'S RECOMMENDATIONS.

THE CONTRACTOR SHALL BE RESPONSIBLE FOR ALL LANDSCAPED AREAS. IF TOPSOIL, SEED, AND/OR MULCH IS WASHED AWAY BY RAINFALL, THE CONTRACTOR SHALL RESTORE THE AREA.

GENERAL CONTROLS:

WASTE DISPOSAL:
THE CONTRACTOR SHALL PROVIDE AN ADEQUATE NUMBER OF COVERED WASTE CONTAINERS TO ENSURE THAT NO LITTER, DEBRIS, BUILDING MATERIALS, OR SIMILIAR MATERIALS ARE DISCHARGED TO WETLANDS OR WATERCOURSES. THE CONTRACTOR SHALL INSTRUCT SUBCONTRACTORS TO USE THE CONTAINERS FOR WASTE MATERIAL. THE CONTRACTOR SHALL BE PROMPTLY EMPTIED WHEN FULL.

PAVEMENT MAINTENANCE:
THE CONTRACTOR SHALL SWEEP PAVED ROADWAYS ADJACENT TO THE SITE ON A ROUTINE BASIS TO PREVENT TRACKING OF MUD ONTO PUBLIC ROADWAYS AND WASHING OF MUD INTO WATERWAYS. IF THE CONTRACTOR'S SCHEDULE FOR CLEANING THE PAVEMENT IS FOUND TO BE INADEQUATE BY THE OWNER, OWNER'S REPRESENTATIVE, OR CITY, THE CONTRACTOR SHALL INCREASE THE FREQUENCY AT NO ADDITIONAL COST TO THE OWNER.

PROHIBITED DISCHARGES:
CONTRACTOR SHALL PREVENT DAILY CONSTRUCTION MATERIALS AND WASTE FROM ENTERING ANY WETLANDS OR WATERCOURSES, INCLUDING BUT NOT LIMITED TO; CONTAMINATED GROUNDWATER, CONCRETE WASHOUT, FUELS, SOAPS OR SOLVENTS, PAINT, TOXIC SUBSTANCES, ETC.

EXCAVATION DEWATERING:
CONTRACTOR SHALL NOT DISCHARGE DEWATERING MEASURES DIRECTLY INTO WETLANDS AND WATERCOURSES. CONTRACTOR TO UTILIZE ON-SITE INFILTRATION BASINS WITH VELOCITY DISSIPATION DEVICES TO PROPERLY SETTLE DEWATERING FLUIDS. TREATMENT CHEMICALS ARE PROHIBITED FROM ENTERING THE SETTLING BASIN AND MUST BE HANDLED ACCORDING TO APPLICABLE RIDEM REGULATIONS.

REVISIONS

NO.	DATE	DESCRIPTION	BY	CKD
1.	12/6/2022	ZONING BOARD OF APPEALS SUBMISSION	RL	JAB
2.	1/13/2023	REVISIONS PER PEER REVIEW COMMENTS	RL	JAB
3.	5/12/2023	MODIFIED SITE LAYOUT	MM	JAB

COMMONWEALTH OF MASSACHUSETTS
JAMES A. BERNARDINO
No. 41717
REGISTERED PROFESSIONAL ENGINEER
PROFESSIONAL SEAL

PROJECT:
PROPOSED MULTI FAMILY RESIDENCES
#778 MAIN STREET
LEICESTER, MA 01524

PREPARED FOR:
CHARLTON ROAD REALTY, LLC
25 WATERVILLE LANE
SHREWSBURY, MA 01545

ENGINEERING SERVICES
ENVIRONMENTAL SERVICES
67 Hall Road
Sturbridge, MA 01560
Phone: 774-241-0901
fax: 774-241-0906
CMG EST. 2002

ISSUE DATE: 10/24/2022
DRAWN BY: MM CHECKED BY: JAB
SCALE: NTS
PROJECT NO.: 2021-226

EROSION & SEDIMENT CONTROL DETAILS

C-7.1

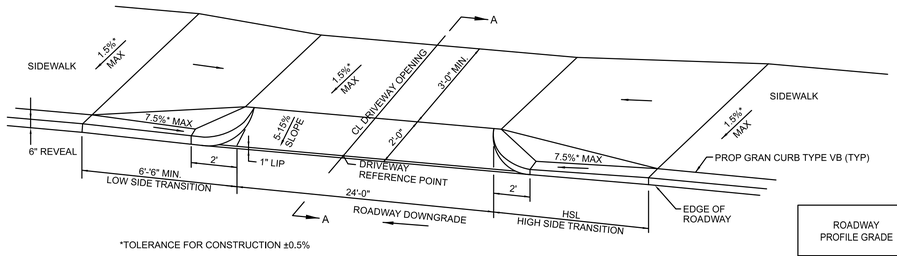

*TOLERANCE FOR CONSTRUCTION ±0.5%

DRIVEWAY OPENING AT SIDEWALK

NOT TO SCALE - MASSHIGHWAY DETAIL E 107.8.0

ROADWAY PROFILE GRADE	*HIGHSIDE TRANSITION LENGTH
%	ENGLISH UNITS
=0%	6'-6"
>0% TO 1%	7'-8"
>1% TO 2%	9'-0"
>2% TO 3%	11'-0"
>3% TO 4%	14'-0"
>4% TO 5%	15'-0" Max

NOTE:

* BASED ON A DESIGN SLOPE 7.5% AND A REVEAL OF 6".

CURB TRANSITION LENGTHS

NOT TO SCALE - MASSHIGHWAY DETAIL E 107.9.0

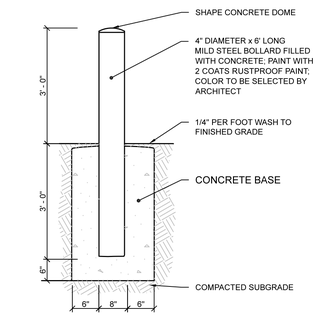

STEEL PIPE BOLLARD DETAIL

NOT TO SCALE

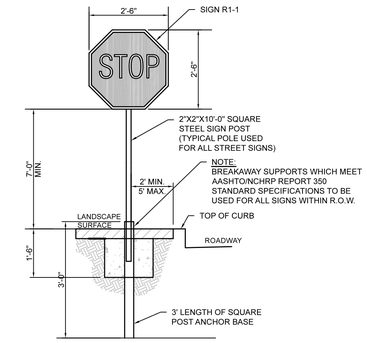

TYPICAL TRAFFIC SIGN DETAIL

NOT TO SCALE

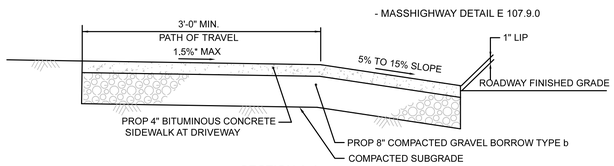

SECTION A-A

NOT TO SCALE

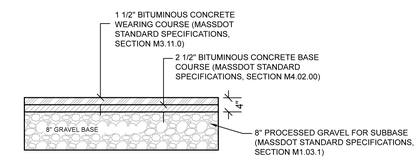

ASPHALT PAVEMENT DETAIL

NOT TO SCALE

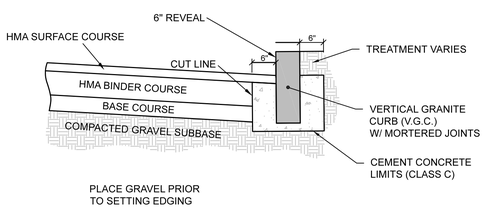

VERTICAL GRANITE CURB DETAIL

NOT TO SCALE

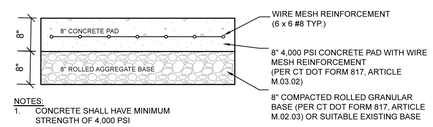

NOTES:

1. CONCRETE SHALL HAVE MINIMUM STRENGTH OF 4,000 PSI
2. WELDED WIRE FABRIC MATS WITH REINFORCEMENT AT CLOSER SPACING MAY BE USED.
3. CONCRETE PAD SHALL BE USED FOR GENERATOR PAD AND DUMPSTER PAD.

CONCRETE PAD DETAIL

NOT TO SCALE

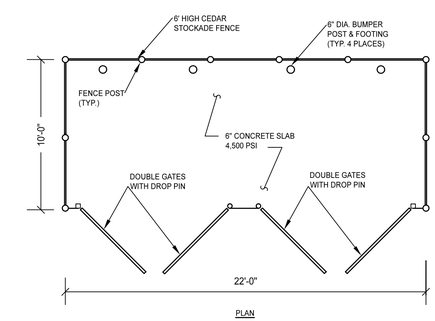

DOUBLE DUMPSTER ENCLOSURE

NOT TO SCALE

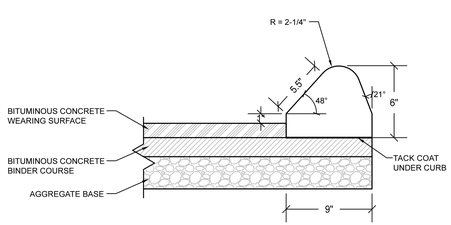

BITUMINOUS CURB DETAIL

NOT TO SCALE

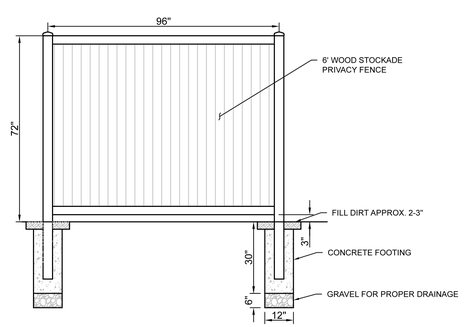

WOOD STOCKADE FENCE DETAIL

NOT TO SCALE

DIG SAFE NOTE (1-888-344-7233):

CONTRACTOR REQUIRED TO NOTIFY "DIG SAFE" 72 HOURS PRIOR TO ANY ON-SITE EXCAVATION OR CONSTRUCTION AT 1-888-344-7233. CONTRACTOR SHALL ALSO NOTIFY LOCAL WATER AND SEWER DEPARTMENTS TO MARK OUT THEIR UTILITIES.

REVISIONS

NO.	DATE	DESCRIPTION	BY	CK'D
1.	12/6/2022	ZONING BOARD OF APPEALS SUBMISSION	RL	JAB
2.	1/13/2023	REVISIONS PER PEER REVIEW COMMENTS	RL	JAB
3.	5/12/2023	MODIFIED SITE LAYOUT	MM	JAB

COMMONWEALTH OF MASSACHUSETTS
JAMES A. BERNARDINO
No. 41717
REGISTERED PROFESSIONAL ENGINEER

PROFESSIONAL SEAL

PROJECT:

PROPOSED MULTI FAMILY RESIDENCES
#778 MAIN STREET
LEICESTER, MA 01524

PREPARED FOR:

CHARLTON ROAD REALTY, LLC
25 WATERVILLE LANE
SHREWSBURY, MA 01545

ENGINEERING SERVICES
ENVIRONMENTAL SERVICES

67 Hall Road
Sturbridge, MA 01560
Phone: 774-241-0901
fax: 774-241-0906

CMG EST. 2002

ISSUE DATE: 10/24/2022
DRAWN BY: MM CHECKED BY: JAB
SCALE: NTS
PROJECT NO.: 2021-226

CONSTRUCTION DETAILS

C-8.0

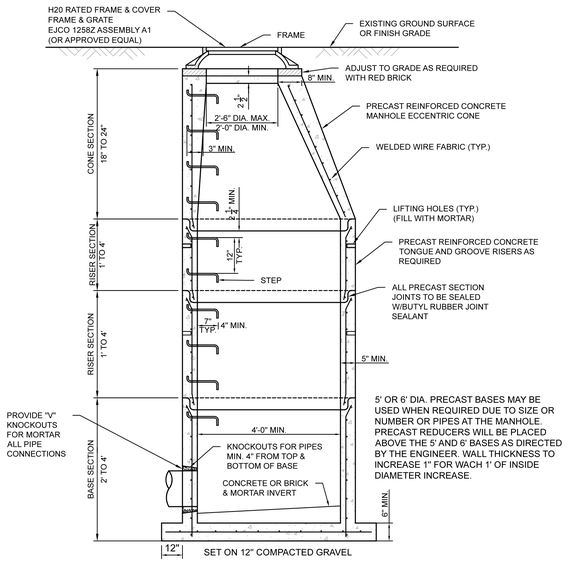

PRECAST DRAIN MANHOLE DETAIL

NOT TO SCALE

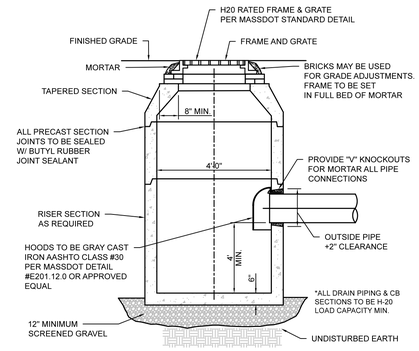

DEEP SUMP CATCH BASIN DETAIL

NOT TO SCALE

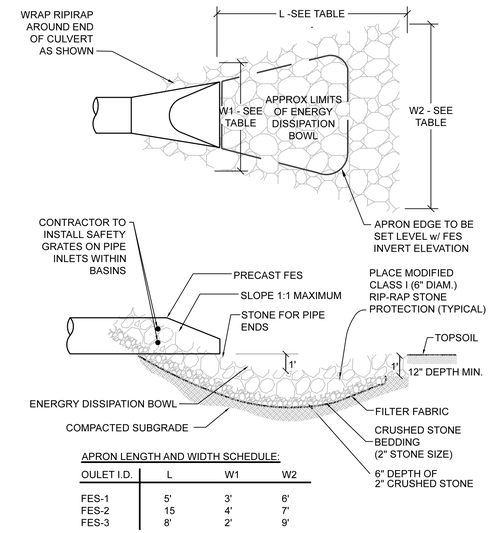

APRON LENGTH AND WIDTH SCHEDULE:

OULET I.D.	L	W1	W2
FES-1	5'	3'	6'
FES-2	15	4'	7'
FES-3	8'	2'	9'

FLARED END DETAIL

NOT TO SCALE

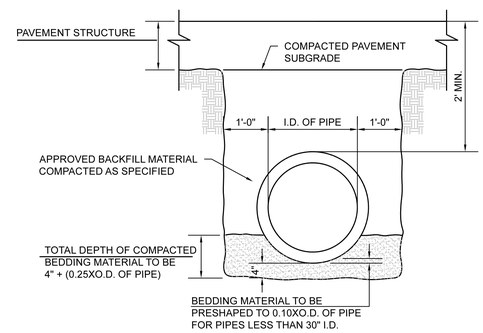

STORM SEWER TRENCH DETAIL

NOT TO SCALE

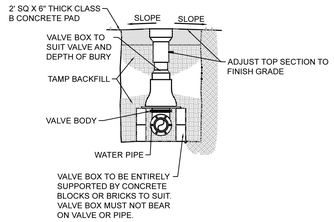

WATER GATE VALVE DETAIL

NOT TO SCALE

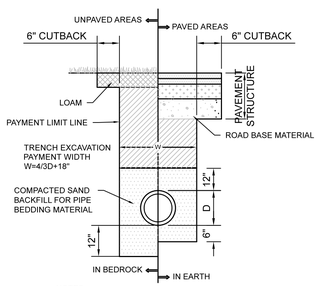

NOTES:

1. THIS DETAIL APPLIES TO CONSTRUCTION OF WATER, GAS, TELEPHONE, ELECTRIC, AND CABLE TELEVISION UTILITIES. UNLESS DIRECTED OTHERWISE BY APPLICABLE UTILITY COMPANIES.

2. PROVIDE 5' MINIMUM COVER OVER WATER SERVICE LINE UNLESS DIRECTED OTHERWISE BY WATER COMPANY.

UTILITY TRENCH DETAIL

NOT TO SCALE

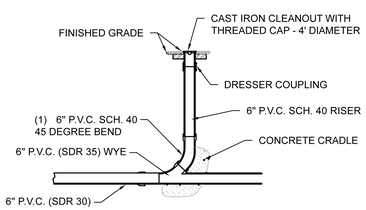

CLEANOUT DETAIL

NOT TO SCALE

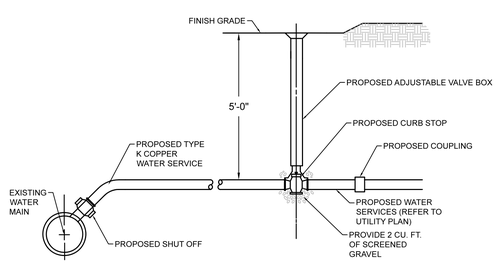

NOTE: CONTRACTOR TO COORDINATE WITH WATER COMPANY PRIOR TO INSTALLATION.

WATER SERVICE CONSTRUCTION DETAIL

NOT TO SCALE

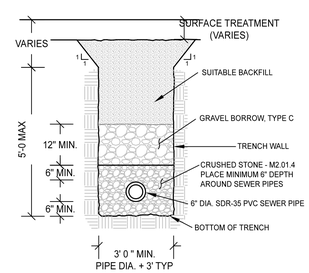

NOTES:

1. ALL SEWER INSTALLATION WORK SHALL CONFORM TO THE TOWN OF DOUGLAS SEWER REGULATIONS.

SEWER TRENCH DETAIL

NOT TO SCALE

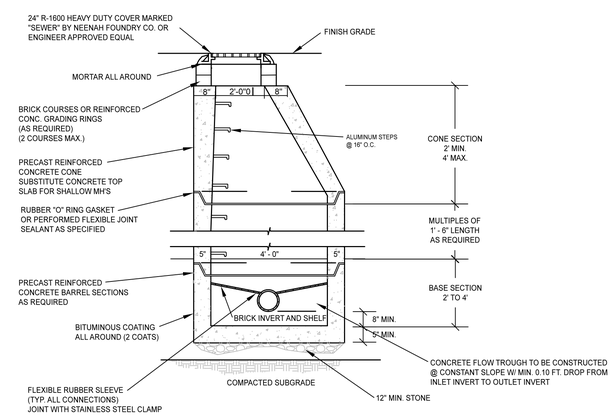

PRECAST SEWER MANHOLE DETAIL

NOT TO SCALE

DIG SAFE NOTE (1-888-344-7233):
CONTRACTOR REQUIRED TO NOTIFY "DIG SAFE" 72 HOURS PRIOR TO ANY ON-SITE EXCAVATION OR CONSTRUCTION AT 1-888-344-7233. CONTRACTOR SHALL ALSO NOTIFY LOCAL WATER AND SEWER DEPARTMENTS TO MARK OUT THEIR UTILITIES.

REVISIONS

NO.	DATE	DESCRIPTION	BY	CKD
1.	12/6/2022	ZONING BOARD OF APPEALS SUBMISSION	RL	JAB
2.	1/13/2023	REVISIONS PER PEER REVIEW COMMENTS	RL	JAB
3.	5/12/2023	MODIFIED SITE LAYOUT	MM	JAB

COMMONWEALTH OF MASSACHUSETTS
JAMES A. BERNARDINO
No. 41717
REGISTERED PROFESSIONAL ENGINEER
PROFESSIONAL SEAL

PROJECT:
PROPOSED MULTI FAMILY RESIDENCES
#778 MAIN STREET
LEICESTER, MA 01524

PREPARED FOR:
CHARLTON ROAD REALTY, LLC
25 WATERVILLE LANE
SHREWSBURY, MA 01545

ENGINEERING SERVICES
ENVIRONMENTAL SERVICES
67 Hall Road
Sturbridge, MA 01560
Phone: 774-241-0901
fax: 774-241-0906
CMG EST. 2002

ISSUE DATE: 10/24/2022
DRAWN BY: MM CHECKED BY: JAB
SCALE: NTS
PROJECT NO.: 2021-226

CONSTRUCTION DETAILS

C-8.1

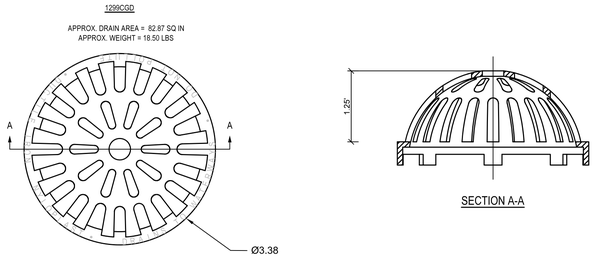

NYLOPLAST DOME GRATE DETAIL

NOT TO SCALE

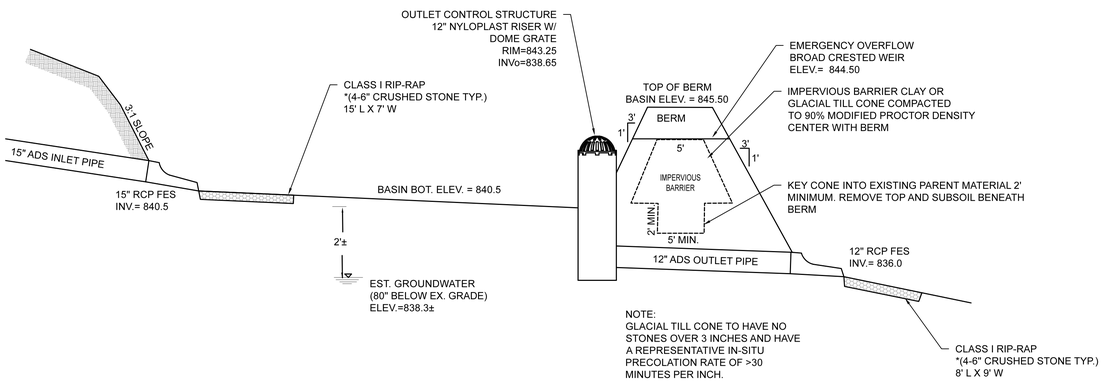

CROSS-SECTION DETAIL OF STORMWATER INFILTRATION BASIN (TYP.)

NOT TO SCALE

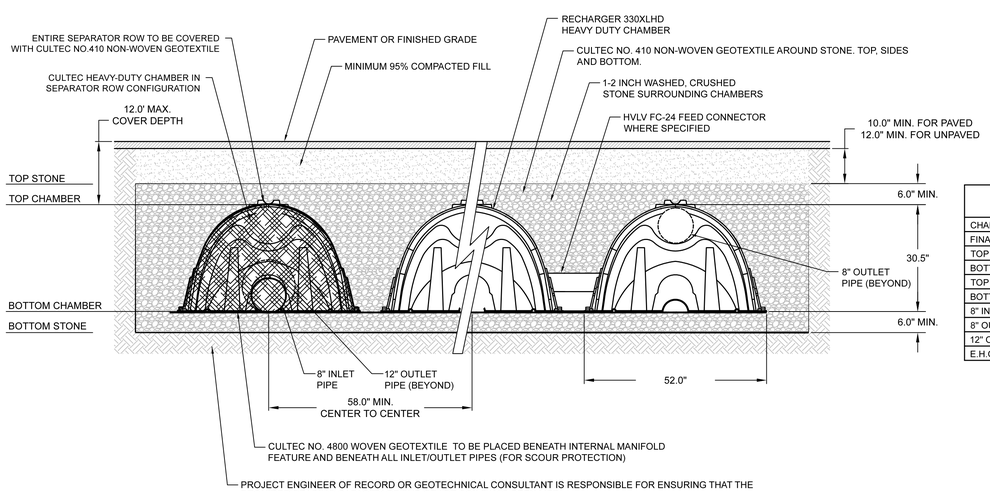

INFILTRATION SYSTEM 2P	
CHAMBERS	16 (4 ROWS OF 4)
FINAL GRADE	845'–846'
TOP STONE	842.54'
BOTTOM STONE	839.00'
TOP CHAMBER	842.04'
BOTTOM CHAMBER	839.50'
8" INLET PIPE	839.50'
8" OUTLET PIPE (TO DHM-1)	841.00'
12" OUTLET PIPE (TO DMH-1)	839.50'
E.H.G.W.	840.0' (79" B.G.S.)

UNDERGROUND INFILTRATION CHAMBER DETAIL WITH SEPARATOR ROW

NOT TO SCALE

DIG SAFE NOTE (1-888-344-7233):
CONTRACTOR REQUIRED TO NOTIFY "DIG SAFE" 72 HOURS PRIOR TO ANY ON-SITE EXCAVATION OR CONSTRUCTION AT 1-888-344-7233. CONTRACTOR SHALL ALSO NOTIFY LOCAL WATER AND SEWER DEPARTMENTS TO MARK OUT THEIR UTILITIES.

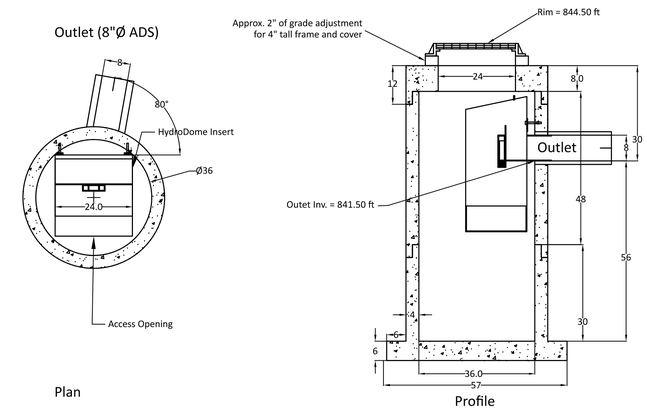

HD 3 Storage Vol = 245 gal

HydroDome
US Patent # 10,801,196
www.hydroworks.com
888-290-7900

Hydroworks HydroDome HD 3i (36"Ø)
PROJECT: 778 Main St. - WQU 1
LOCATION: Leicester, MA
REVISION DATE: 5/10/2023

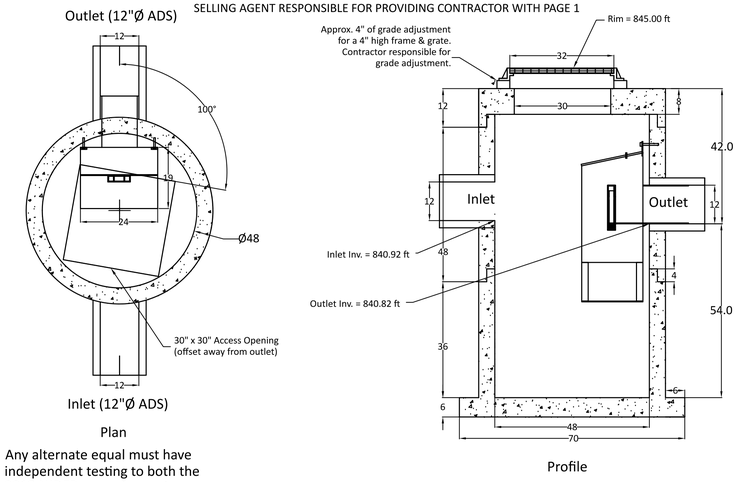

Any alternate equal must have independent testing to both the 2013 NJDEP separator protocol and the 2013 ETV Canada separator protocol

HydroDome by
Hydroworks, LLC
U.S. Patent #10,801,196
www.hydroworks.com
888-290-7900

Hydroworks HD4i (48"Ø)
PROJECT: 778 Main St. - WQU 2
LOCATION: Leicester, MA
REVISION DATE: 05/10/2023

REVISIONS

NO.	DATE	DESCRIPTION	BY	CKD
1.	12/6/2022	ZONING BOARD OF APPEALS SUBMISSION	RL	JAB
2.	1/13/2023	REVISIONS PER PEER REVIEW COMMENTS	RL	JAB
3.	5/12/2023	MODIFIED SITE LAYOUT	MM	JAB

COMMONWEALTH OF MASSACHUSETTS
JAMES A. BERNARDINO
No. 41717
REGISTERED PROFESSIONAL ENGINEER
PROFESSIONAL SEAL

PROJECT:
PROPOSED MULTI FAMILY RESIDENCES
#778 MAIN STREET
LEICESTER, MA 01524

PREPARED FOR:
CHARLTON ROAD REALTY, LLC
25 WATERVILLE LANE
SHREWSBURY, MA 01545

ENGINEERING SERVICES
ENVIRONMENTAL SERVICES
67 Hall Road
Sturbridge, MA 01560
Phone: 774-241-0901
fax: 774-241-0906

CMG EST. 2002

ISSUE DATE: 10/24/2022
DRAWN BY: MM CHECKED BY: JAB
SCALE: NTS
PROJECT NO.: 2021-226

CONSTRUCTION DETAILS

C-8.2

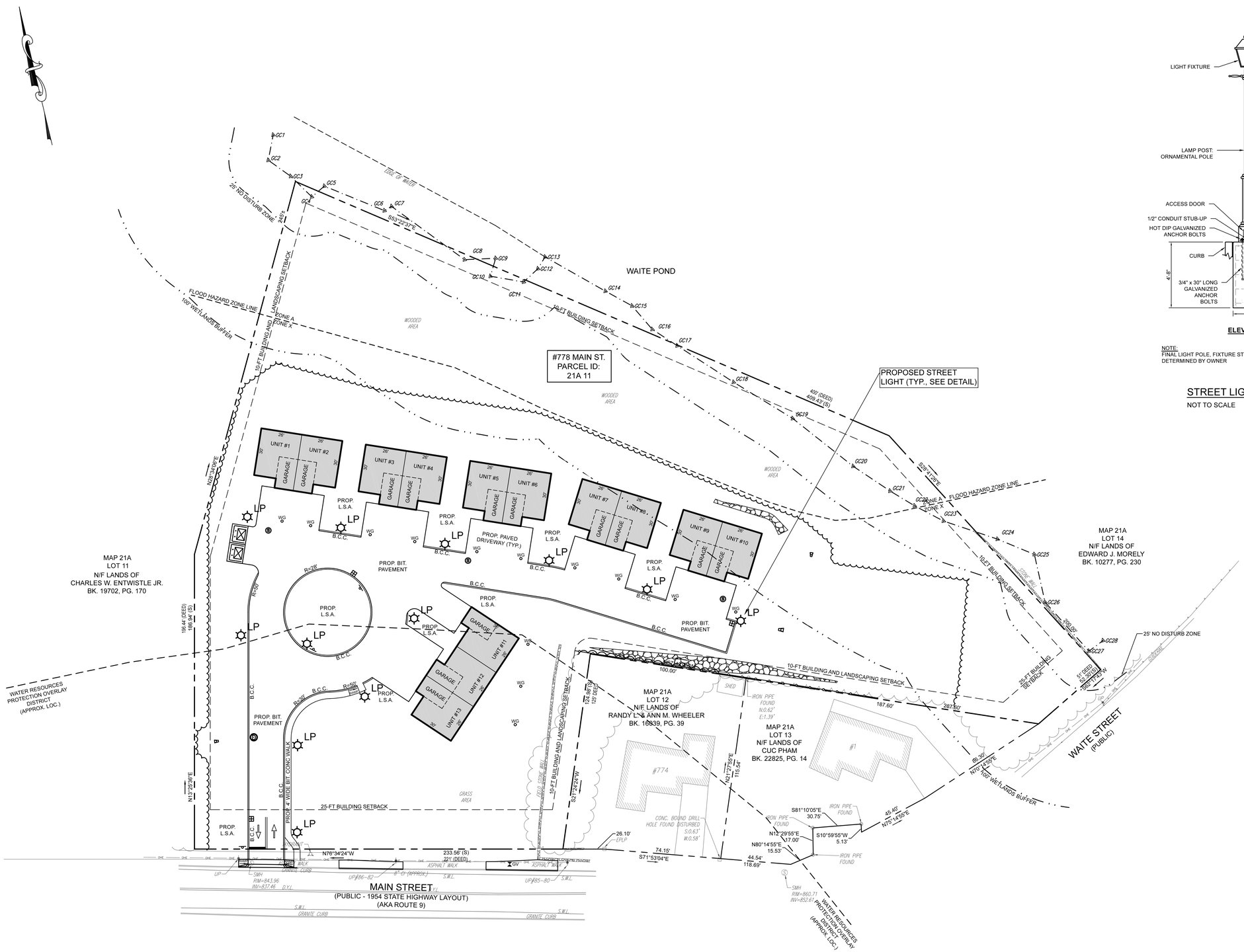

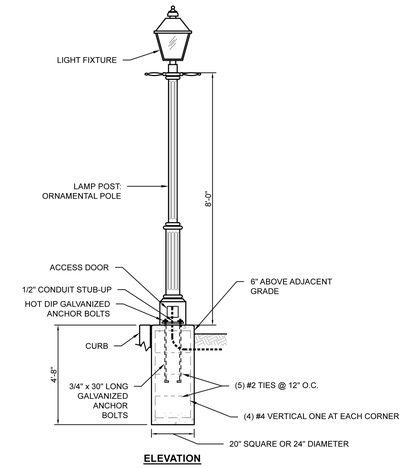

ELEVATION

NOTE:
FINAL LIGHT POLE, FIXTURE STYLE AND MANUFACTURER TO BE DETERMINED BY OWNER

STREET LIGHT DETAIL

NOT TO SCALE

DIG SAFE NOTE (1-888-344-7233):
CONTRACTOR REQUIRED TO NOTIFY "DIG SAFE" 72 HOURS PRIOR TO ANY ON-SITE EXCAVATION OR CONSTRUCTION AT 1-888-344-7233. CONTRACTOR SHALL ALSO NOTIFY LOCAL WATER AND SEWER DEPARTMENTS TO MARK OUT THEIR UTILITIES.

GRAPHIC SCALE

30 0 15 30 60 120

(IN FEET)
1 inch = 30 ft.

REVISIONS

NO.	DATE	DESCRIPTION	BY	CKD
1.	12/6/2022	ZONING BOARD OF APPEALS SUBMISSION	RL	JAB
2.	1/13/2023	REVISIONS PER PEER REVIEW COMMENTS	RL	JAB
3.	5/12/2023	MODIFIED SITE LAYOUT	MM	JAB

COMMONWEALTH OF MASSACHUSETTS
JAMES A. BERNARDINO
No. 41717
REGISTERED PROFESSIONAL ENGINEER

PROFESSIONAL SEAL

PROJECT:
PROPOSED MULTI FAMILY RESIDENCES
#778 MAIN STREET
LEICESTER, MA 01524

PREPARED FOR:
CHARLTON ROAD REALTY, LLC
25 WATERVILLE LANE
SHREWSBURY, MA 01545

ENGINEERING SERVICES
ENVIRONMENTAL SERVICES
67 Hall Road
Sturbridge, MA 01560
Phone: 774-241-0901
fax: 774-241-0906

CMG EST. 2002

ISSUE DATE: 10/24/2022
DRAWN BY: MM | CHECKED BY: JAB
SCALE: 1" = 30'
PROJECT NO.: 2021-226

LIGHTING PLAN