DEFINITIVE SITE PLANS FOR

SKYVIEW ESTATES

MAIN STREET

LEICESTER, MA 01611

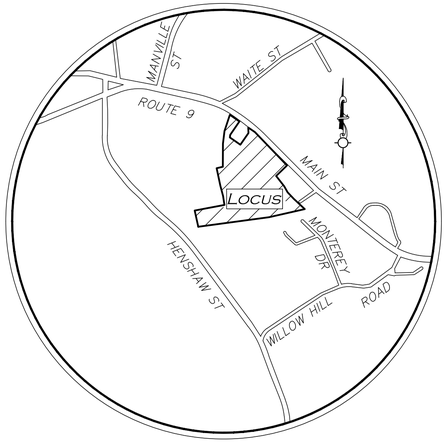

LOCUS MAP
NOT TO SCALE

FOR REGISTRY USE ONLY

APPROVAL UNDER SITE PLAN APPROVAL REQUIRED. SUBJECT TO A COVENANT TO BE RECORDED HEREWITH.

DATE: _____

LEICESTER PLANNING BOARD

I CERTIFY THAT NO NOTICE OF APPEAL WAS RECEIVED DURING THE TWENTY (20) RECORDING DAYS NEXT AFTER RECEIPT AND OF NOTICE FROM THE PLANNING BOARD OF THE APPROVAL OF THIS PLAN

TOWN CLERK – TOWN OF LEICESTER

COMMONWEALTH OF MASSACHUSETTS
MICHAEL A. MALYNOWSKI
CIVIL
No. 47269
REGISTERED PROFESSIONAL ENGINEER

Digitally signed by Michael Malynowski
Date: 2022.02.06 21:17:29 -05'00'

PROFESSIONAL ENGINEER FOR
ALLEN & MAJOR ASSOCIATES, INC.

AGENT:
RE/MAX PATRIOT REALTY
55 MEAD STREET
LEOMINSTER, MA 01453

APPLICANT
MKEP 770 LLC
265 SUNRISE HIGHWAY, SUITE 1368
ROCKVILLE CENTER, NY 11570

OWNER
651 MAIN STREET, LLC
55 MEAD STREET
LEOMINSTER, MA 01453

CIVIL ENGINEER / SURVEYOR:
ALLEN & MAJOR ASSOCIATES, INC.
100 COMMERCE WAY, SUITE 5
WOBURN, MA 01801

ENVIRONMENTAL CONSULTANT
GOVE ENVIRONMENTAL SERVICES, INC.
8 CONTINENTAL DR BLDG 2 UNIT H
EXETER NH 03833-7507

LEICESTER PLANNING BOARD WAIVERS REQUESTED

SECTION V.A.1.f – MINIMUM CENTER LINE RADII. 200' MIN. REQUIRED
TO ALLOW CENTER LINE RADIUS OF 120' AND 135'

SECTION V.A.3.a – MAXIMUM STREET GRADE 10%
TO ALLOW FOR A STREET GRADE OF NO MORE THAN 12%

SECTION VI.B.1A –REINFORCED CONCRETE STORM DRAINAGE PIPING REQUIRED
A WAIVER IS REQUESTED TO UTILIZE HIGH DENSITY POLYPROPYLENE (HDPE) DRAINAGE LINES OR APPROVED EQUAL WITHIN THE DRAINAGE SYSTEM OF THE SUBDIVISION.

SECTION VI.C.4 – VELOCITIES SHALL BE BETWEEN 2 AND 10 FEET PER SECOND
A WAIVER IS REQUESTED ALLOW WATER VELOCITY WITHIN THE CLOSED STORMWATER SYSTM FROM 11.92 FPS TO 14.0 FPS WHICH IS LESS THAN THE MANUFACTURES RECOMMENDATION FOR SCOUR WITHIN THE PIPING NETWORK.

SECTION VI.E.3 – STREET LIGHTING REQUIRED
TO ALLOW STREET LIGHTING TO BE INSTALLED AS PRIVATE DRIVEWAY LIGHT

SECTION VI.L STREET TREES SHALL BE INSTALLED ON BOTH SIDES OF THE ROADWAY
TO ALLOW FOR STREET TREE PLANTINGS TO BE INSTALLED ON ONE SIDE ONLY

SECTION VI.G.1 – SIDEWALKS SHALL BE INSTALLED ON BOTH SIDES OF ALL STREETS WITHIN A SUBDIVISION
A WAIVER IS REQUESTED TO INSTALL SIDEWALKS ON ONLY 1 SIDE OF THE ROADWAY DUE TO THE STEEP TERRAIN OF THE PROPOSED SUBDIVISION AND LACK OF CONNECTION TO A MUNICIPAL SIDEWALK ALONG MAIN STREET (AKA ROUTE 9)

GENERAL NOTES

1. THE OWNER OF RECORD:

   LOT 21–B5.1
   651 MAIN STREET, LLC
   55 MEAD STREET
   LEOMINSTER, MA 01453
   BOOK 66895, PAGE 224

2. ZONING DISTRICT: BUSINESS (B) AND SUBURBAN AGRICULTURAL (SA) DISTRICT TO THE SOUTH & WEST

LOT SIZE:	22,500 SF
LOT FRONTAGE:	100 FT.
FRONT SETBACK:	25 FT.
SIDE SETBACK:	15 FT.
REAR SETBACK:	25 FT.

3. EXISTING USE OF LOT 21–B5.1 IS VACANT LAND.

4. NO PORTION OF THE PROPERTY IS WITHIN THE 100 YEAR FLOOD BOUNDARY HAZARD ZONE AS SHOWN ON THE FLOOD INSURANCE RATE MAP #25027C0782E WITH AN EFFECTIVE DATE: JULY 14, 2011 FOR THE CITY OF LEICESTER.

LIST OF DRAWINGS

DRAWING TITLE	SHEET NO.	ISSUED	REVISED
COVER	C	09/17/21	02/07/22
EXISTING CONDITIONS	V-101	03/08/21	-
TYPICAL BUILDING KEY PLANS	C-001	02/07/22	-
VEGETATION MANAGEMENT PLAN	C-002	02/07/22	-
SITE PREPARATION PLAN - PHASE 1A	C-100	09/17/21	02/07/22
SITE PREPARATION PLAN - PHASE 1B	C-100A	02/07/22	-
SITE PREPARATION PLAN - PHASE 1C	C-100B	02/07/22	-
SITE PREPARATION PLAN - PHASE 2	C-100C	02/07/22	-
OVERALL SITE LAYOUT KEY PLAN	C-101	09/17/21	02/07/22
ENLARGED SITE LAYOUT PLAN	C-101A	09/17/21	02/07/22
ENLARGED SITE LAYOUT PLAN	C-101B	09/17/21	02/07/22
ENLARGED SITE LAYOUT PLAN	C-101C	09/17/21	02/07/22
OVERALL GRADING & DRAINAGE PLAN	C-102	09/17/21	02/07/22
GRADING & DRAINAGE PLAN	C-102A	09/17/21	02/07/22
GRADING & DRAINAGE PLAN	C-102B	09/17/21	02/07/22
GRADING & DRAINAGE PLAN	C-102C	09/17/21	02/07/22
EARTH MOVING SUMMARY PLAN	C-102D	02/07/22	-
OVERALL UTILITIES PLAN	C-103	09/17/21	02/07/22
UTILITIES PLAN	C-103A	09/17/21	02/07/22
UTILITIES PLAN	C-103B	09/17/21	02/07/22
UTILITIES PLAN	C-103C	09/17/21	02/07/22
ROADWAY PROFILE - SKYVIEW DRIVE	C-201	09/17/21	02/07/22
ROADWAY PROFILES - KETTLE LANE & EMERGENCY ACCESS	C-202	09/17/21	02/07/22
DETAILS	C-501	09/17/21	02/07/22
DETAILS	C-502	09/17/21	02/07/22
DETAILS	C-503	09/17/21	02/07/22
DETAILS	C-504	09/17/21	02/07/22
DETAILS	C-505	10/05/21	02/07/22
DETAILS	C-506	10/05/21	02/07/22
DETAILS	C-507	12/14/21	02/07/22

ISSUED FOR DEFINITIVE SUBDIVISION: JULY 16, 2021
UPDATES PER PEER REVIEW & LAYOUT CHANGE: OCT. 5, 2021
UPDATES PER TOWN COMMENTS: NOV. 10, 2021
UPDATES PER TOWN COMMENTS: DEC. 14, 2021
UPDATES PER TOWN COMMENTS: FEB. 07, 2022

REV	DATE	DESCRIPTION
4	02-07-22	MISC. REVISIONS PER TOWN COMMENTS
3	12-14-21	MISC. REVISIONS PER TOWN COMMENTS
2	11-10-21	MISC. REVISIONS PER TOWN COMMENTS
1	10-05-21	MISC. REVISIONS PER TOWN COMMENTS

APPLICANT:
MKEP 770 LLC
265 SUNRISE HIGHWAY, SUITE 1368
ROCKVILLE CENTER, NY 11570

PROJECT:
SKYVIEW ESTATES
RESIDENTIAL DEVELOPMENT
MAIN STREET
LEICESTER, MA

PROJECT NO.	2889-01	DATE:	09-17-21
SCALE:	NONE	DWG. : C-2889-01_Cover	
DESIGNED BY:	SM	CHECKED BY:	MAM

PREPARED BY:
ALLEN & MAJOR ASSOCIATES, INC.
civil engineering ♦ land surveying
environmental consulting ♦ landscape architecture
www.allenmajor.com
100 COMMERCE WAY, SUITE 5
WOBURN MA 01801
TEL: (781) 935-6889
FAX: (781) 935-2896
WOBURN, MA ♦ LAKEVILLE, MA ♦ MANCHESTER, NH

THIS DRAWING HAS BEEN PREPARED IN DIGITAL FORMAT. CLIENT/CLIENT'S REPRESENTATIVE OR CONSULTANTS MAY BE PROVIDED COPIES OF DRAWINGS AND SPECIFICATIONS FOR HIS/HER INFORMATION AND/OR SPECIFIC USE ON THIS PROJECT. DUE TO THE POTENTIAL THAT THE PROVIDED INFORMATION MAY BE MODIFIED UNINTENTIONALLY OR OTHERWISE, ALLEN & MAJOR ASSOCIATES, INC. MAY REMOVE ALL INDICATION OF THE DOCUMENT'S AUTHORSHIP ON THE DIGITAL MEDIA. PRINTED REPRESENTATIONS OR PORTABLE DOCUMENT FORMAT OF THE DRAWINGS AND SPECIFICATIONS ISSUED SHALL BE THE ONLY RECORD COPIES OF ALLEN & MAJOR ASSOCIATES, INC.'S WORK PRODUCT.

DRAWING TITLE: COVER

SHEET No. C

Copyright © 2022 Allen & Major Associates, Inc.
All Rights Reserved

R:\PROJECTS\2889-01\CIVIL\DRAWINGS\CURRENT\C-2889-01_COVER.DWG

LOCUS MAP

(NOT TO SCALE)

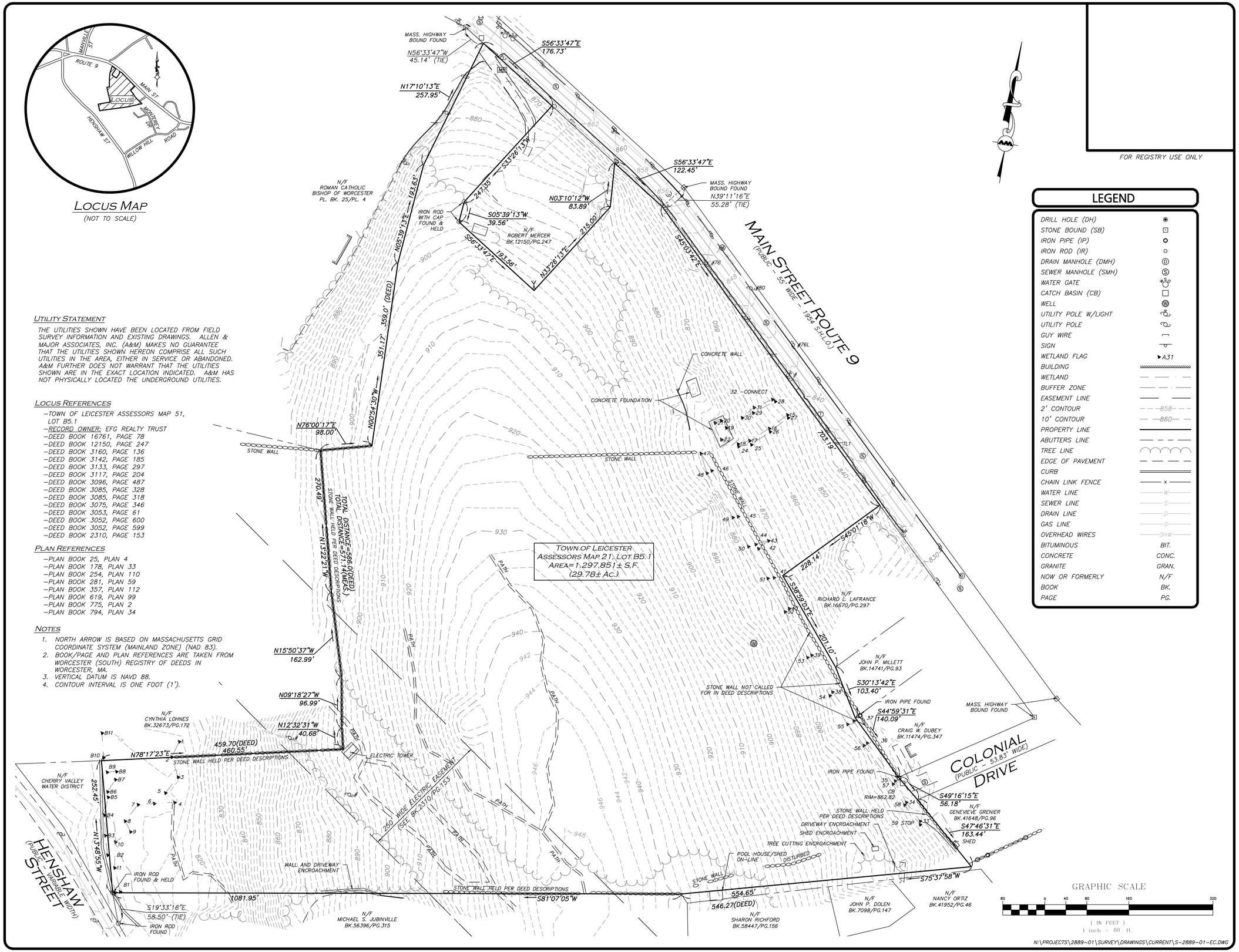

N:\PROJECTS\2889-01\SURVEY\DRAWINGS\CURRENT\S-2889-01-EC.DWG

UTILITY STATEMENT

THE UTILITIES SHOWN HAVE BEEN LOCATED FROM FIELD SURVEY INFORMATION AND EXISTING DRAWINGS. ALLEN & MAJOR ASSOCIATES, INC. (A&M) MAKES NO GUARANTEE THAT THE UTILITIES SHOWN HEREON COMPRISE ALL SUCH UTILITIES IN THE AREA, EITHER IN SERVICE OR ABANDONED. A&M FURTHER DOES NOT WARRANT THAT THE UTILITIES SHOWN ARE IN THE EXACT LOCATION INDICATED. A&M HAS NOT PHYSICALLY LOCATED THE UNDERGROUND UTILITIES.

LOCUS REFERENCES

- TOWN OF LEICESTER ASSESSORS MAP 51, LOT B5.1
- RECORD OWNER: EFG REALTY TRUST
- DEED BOOK 16761, PAGE 78
- DEED BOOK 12150, PAGE 247
- DEED BOOK 3160, PAGE 136
- DEED BOOK 3142, PAGE 185
- DEED BOOK 3133, PAGE 297
- DEED BOOK 3117, PAGE 204
- DEED BOOK 3096, PAGE 487
- DEED BOOK 3085, PAGE 328
- DEED BOOK 3085, PAGE 318
- DEED BOOK 3075, PAGE 346
- DEED BOOK 3053, PAGE 61
- DEED BOOK 3052, PAGE 600
- DEED BOOK 3052, PAGE 599
- DEED BOOK 2310, PAGE 153

PLAN REFERENCES

- PLAN BOOK 25, PLAN 4
- PLAN BOOK 178, PLAN 33
- PLAN BOOK 254, PLAN 110
- PLAN BOOK 281, PLAN 59
- PLAN BOOK 357, PLAN 112
- PLAN BOOK 619, PLAN 99
- PLAN BOOK 775, PLAN 2
- PLAN BOOK 794, PLAN 34

NOTES

1. NORTH ARROW IS BASED ON MASSACHUSETTS GRID COORDINATE SYSTEM (MAINLAND ZONE) (NAD 83).
2. BOOK/PAGE AND PLAN REFERENCES ARE TAKEN FROM WORCESTER (SOUTH) REGISTRY OF DEEDS IN WORCESTER, MA.
3. VERTICAL DATUM IS NAVD 88.
4. CONTOUR INTERVAL IS ONE FOOT (1').

FOR REGISTRY USE ONLY

LEGEND

DRILL HOLE (DH)	
STONE BOUND (SB)	
IRON PIPE (IP)	
IRON ROD (IR)	
DRAIN MANHOLE (DMH)	
SEWER MANHOLE (SMH)	
WATER GATE	
CATCH BASIN (CB)	
WELL	
UTILITY POLE W/LIGHT	
UTILITY POLE	
GUY WIRE	
SIGN	
WETLAND FLAG	A31
BUILDING	
WETLAND	
BUFFER ZONE	
EASEMENT LINE	
2' CONTOUR	858
10' CONTOUR	860
PROPERTY LINE	
ABUTTERS LINE	
TREE LINE	
EDGE OF PAVEMENT	
CURB	
CHAIN LINK FENCE	x
WATER LINE	W
SEWER LINE	S
DRAIN LINE	D
GAS LINE	G
OVERHEAD WIRES	OHW
BITUMINOUS	BIT.
CONCRETE	CONC.
GRANITE	GRAN.
NOW OR FORMERLY	N/F
BOOK	BK.
PAGE	PG.

WE HEREBY CERTIFY THAT:

THIS PLAN IS THE RESULT OF AN ACTUAL ON THE GROUND SURVEY PERFORMED ON OR BETWEEN JANUARY 10, 2021 AND FEBRUARY 9, 2021.

THIS PLAN WAS PREPARED IN ACCORDANCE WITH THE RULES AND REGULATIONS OF THE REGISTERS OF DEEDS DATED JANUARY 1, 1976 AND REVISED JANUARY 12, 1988.

ACCORDING TO DEEDS AND PLANS OF RECORD, THE PROPERTY LINES SHOWN ON THIS PLAN ARE THE LINES DIVIDING EXISTING OWNERSHIP, AND THE LINES OF THE STREETS OR WAYS SHOWN ARE THOSE OF PUBLIC OR PRIVATE STREETS AND WAYS ALREADY ESTABLISHED, AND THAT NO NEW LINES FOR THE DIVISION OF EXISTING OWNERSHIP OR FOR NEW WAYS ARE SHOWN.

THE ABOVE CERTIFICATION IS INTENDED TO MEET REGISTRY OF DEEDS REQUIREMENTS FOR THE RECORDING OF PLANS AND IS NOT A CERTIFICATION TO THE TITLE OR OWNERSHIP OF THE PROPERTY SHOWN. OWNERS OF ADJOINING PROPERTIES ARE SHOWN ACCORDING TO CURRENT TOWN OF LEICESTER ASSESSOR'S INFORMATION.

THE ABOVE IS CERTIFIED TO THE BEST OF MY PROFESSIONAL KNOWLEDGE, INFORMATION AND BELIEF.

ALLEN & MAJOR ASSOCIATES, INC.

PROFESSIONAL LAND SURVEYOR FOR ALLEN & MAJOR ASSOCIATES, INC.

REV	DATE	DESCRIPTION

APPLICANT:

MKEP 770 LLC
265 SUNRISE HIGHWAY, SUITE 1368
ROCKVILLE CENTER, NY 11570

PROJECT:

651 MAIN STREET
LEICESTER, MA

PROJECT NO.	2889-01	DATE:	03/08/21
SCALE:	1" = 80'	DWG. NAME:	S-2889-01-EC
DRAFTED BY:	AJR	CHECKED BY:	NIL

PREPARED BY:

ALLEN & MAJOR ASSOCIATES, INC.
civil engineering ◆ land surveying
environmental consulting ◆ landscape architecture
www.allenmajor.com
100 COMMERCE WAY
WOBURN MA 01801-8501
TEL: (781) 935-6889
FAX: (781) 935-2896
WOBURN, MA ◆ LAKEVILLE, MA ◆ MANCHESTER, NH

THIS DRAWING HAS BEEN PREPARED IN DIGITAL FORMAT. CLIENT/CLIENT'S REPRESENTATIVE OR CONSULTANTS MAY BE PROVIDED COPIES OF DRAWINGS AND SPECIFICATIONS FOR HIS/HER INFORMATION AND/OR SPECIFIC USE ON THIS PROJECT. DUE TO THE POTENTIAL THAT THE PROVIDED INFORMATION MAY BE MODIFIED UNINTENTIONALLY OR OTHERWISE, ALLEN & MAJOR ASSOCIATES, INC. MAY REMOVE ALL INDICATION OF THE DOCUMENT'S AUTHORSHIP ON THE DIGITAL MEDIA. PRINTED REPRESENTATIONS OR PORTABLE DOCUMENT FORMAT OF THE DRAWINGS AND SPECIFICATIONS ISSUED SHALL BE THE ONLY RECORD COPIES OF ALLEN & MAJOR ASSOCIATES, INC.'S WORK PRODUCT.

DRAWING TITLE: EXISTING CONDITIONS

SHEET No. V-101

Copyright©2021 Allen & Major Associates, Inc.
All Rights Reserved

LANDSCAPE NOTES

1. ALL WORK SHALL BE IN ACCORDANCE WITH THE REQUIREMENTS OF THE CITY/TOWN OF LEICESTER, MA.
2. PLANTING PLAN IS DIAGRAMMATIC IN NATURE, EVERGREEN AND DECIDUOUS SHRUBS ARE TYPICAL AND SHOWN WITH SYMBOLS. IT IS UP TO THE CONTRACTOR TO SELECT PLANT STOCK FOR THE SITE CONDITIONS, SHADE, SUN, AND MICROCLIMATE AS WELL AS WHAT IS AVAILABLE AT THE NURSERY.
3. THE CONTRACTOR SHALL BE RESPONSIBLE FOR CONTACTING ALL UTILITY COMPANIES, ANY PERMITTING AGENCIES, AND "DIG–SAFE" (1–888–344–7233) AT LEAST 72 HOURS IN ADVANCE OF ANY WORK THAT WILL REQUIRE EXCAVATION. CONTRACTOR SHALL IN WRITING NOTIFY THE OWNERS REPRESENTATIVE OF ANY CONFLICTS.
4. NO INVASIVE SPECIES OR PLANTS THAT COULD BECOME INVASIVE ARE TO BE PLANTED (NO BURNING BUSH OR GIANT MISCANTHUS, OR JAPANESE BARBERRY – REFER TO THE MASS. PROHIBITED PLANT LIST). NATIVE AND ORNAMENTAL PLANTINGS THAT AREA APPROPRIATE FOR LOCATING NEXT TO A HOME ARE TO BE SELECTED. PLANT SIZES TO BE PERENNIALS – 1 GAL. SHRUBS 3–5 GAL AND LARGE DECIDUOUS SHRUB TO BE 3–4' HT. B&B.
8. ALL PLANT MATERIALS INSTALLED SHALL MEET THE GUIDELINES ESTABLISHED BY THE STANDARDS FOR NURSERY STOCK PUBLISHED BY AMERICANHORT (LATEST EDITION). PLANTINGS TO HAVE 18" MIN TOPSOIL AROUND ROOTBALLS. 3" MIN PINE PARK MULCH SHALL BE PLACE ON LANDSCAPE BEDS.
9. ALL PLANT MATERIALS SHALL BE GUARANTEED FOR ONE YEAR FOLLOWING DATE OF ACCEPTANCE
10. ALL DISTURBED AREAS NOT OTHERWISE NOTED SHALL RECEIVE 6" OF SUITABLE LOAM & SEED LAWNS WITH 3:1 OR GREATER SLOPES SHALL BE PROTECTED WITH AN EROSION CONTROL BLANKET.
22. A MINIMUM 18" WIDE BARRIER OF PEASTONE SHALL BE INSTALLED IN ALL PLANT BED WHICH ABUT THE BUILDINGS. NO MULCH IS ALLOWED WITHIN 18" OF BUILDINGS WITH FLAMMABLE MATERIALS PER THE LATEST EXECUTIVE OFFICE OF PUBLIC SAFETY AND SECURITY DEPARTMENT OF FIRE SERVICES REGULATION (527 CMR 17.00).

GENERAL NOTES

1. THE INFORMATION SHOWN ON THIS PLAN IS THE SOLE PROPERTY OF ALLEN & MAJOR ASSOCIATES, INC. ITS INTENDED USE IS TO PROVIDE INFORMATION. ANY ALTERATION, MISUSE, OR RECALCULATION OF INFORMATION OR DATA WITHOUT THE EXPRESSED , WRITTEN CONSENT OF ALLEN & MAJOR ASSOCIATES, INC. IS STRICTLY PROHIBITED.
2. THE CONTRACTOR IS RESPONSIBLE FOR THE MEANS AND METHODS OF CONSTRUCTION AND FOR CONDITIONS OF THE SITE. THESE PLANS PREPARED BY ALLEN & MAJOR ASSOCIATES, INC., DO NOT EXTEND TO, NOR INCLUDE SYSTEMS PERTAINING TO THE SAFETY OF THE CONSTRUCTION CONTRACTOR OR THE EMPLOYEES, AGENTS OF REPRESENTATIVES IN PERFORMANCE OF THE WORK. THE SEAL OF THE ARCHITECT OR ENGINEER HEREON DOES NOT EXTEND TO ANY SUCH SAFETY SYSTEMS THAT MAY NOW OR HEREAFTER BE INCORPORATED INTO THESE PLANS. THE CONSTRUCTION CONTRACTOR SHALL PREPARE OF OBTAIN THE APPROPRIATE SAFETY SYSTEMS THAT MAY BE REQUIRED BY THE US OCCUPATIONAL SAFETY AND HEATH ADMINISTRATION (OSHA) AND/OR LOCAL REGULATIONS.
3. IT IS THE RESPONSIBILITY OF THE CONTRACTOR TO REVIEW ALL DRAWINGS AND SPECIFICATIONS ASSOCIATED WITH THE PROJECT WORK SCOPE PRIOR TO THE START OF CONSTRUCTION. SHOULD THE CONTRACTOR FIND A CONFLICT WITH THE DRAWINGS, SPECIFICATIONS, OR RELATIVE CODES, IT IS THE RESPONSIBILITY OF THE CONTRACTOR TO NOTIFY THE ENGINEER AND/OR ARCHITECT PRIOR TO START OF CONSTRUCTION. FAILURE BY THE CONTRACTOR TO NOTIFY THE ENGINEER AND/OR ARCHITECT SHALL CONSTITUTE ACCEPTANCE OF FULL RESPONSIBILITY BY THE CONTRACTOR TO COMPLETE THE SCOPE OF WORK AND/OR DESIGN INTENT OF THE DRAWINGS AND IN FULL COMPLIANCE WITH LOCAL REGULATIONS AND CODES.
4. THE DESIGN ENGINEER WAIVES ANY AND ALL RESPONSIBILITY AND LIABILITY FOR PROBLEMS WHICH ARISE FROM FAILURE TO FOLLOW THESE PLANS, SPECIFICATIONS, AND/OR THE DESIGN INTENT THEY CONVEY, OR FOR PROBLEMS WHICH ARISE FROM OTHERS' FAILURE TO OBTAIN AND/OR FOLLOW THE GUIDANCE OF THE DESIGN ENGINEER WITH RESPECT TO ANY ERRORS, OMISSIONS, INCONSISTENCIES, AMBIGUITIES, OR CONFLICTS WHICH ARE DISCOVERED OR ALLEGED.
5. PARKING REQUIREMENTS SHALL BE MET THROUGH THE CONSTRUCTION OF AN ATTACHED TWO CAR GARAGE FOR EACH RESIDENTIAL UNIT AND A MINIMUM OF TWO CARS WITHIN DRIVEWAY AREA FOR A TOTAL OF FOUR SPACES FOR EACH DWELLING UNIT.

LEGEND

BUILDING	
CAPE COD BERM	
BITUMINOUS SIDEWALK	
DRAIN LINE	
SEWER LINE	
WATER LINE	W
DOMESTIC WATER LINE	W–D
ELEC/CABLE CONDUIT	E–C E–C
GAS LINE	GAS

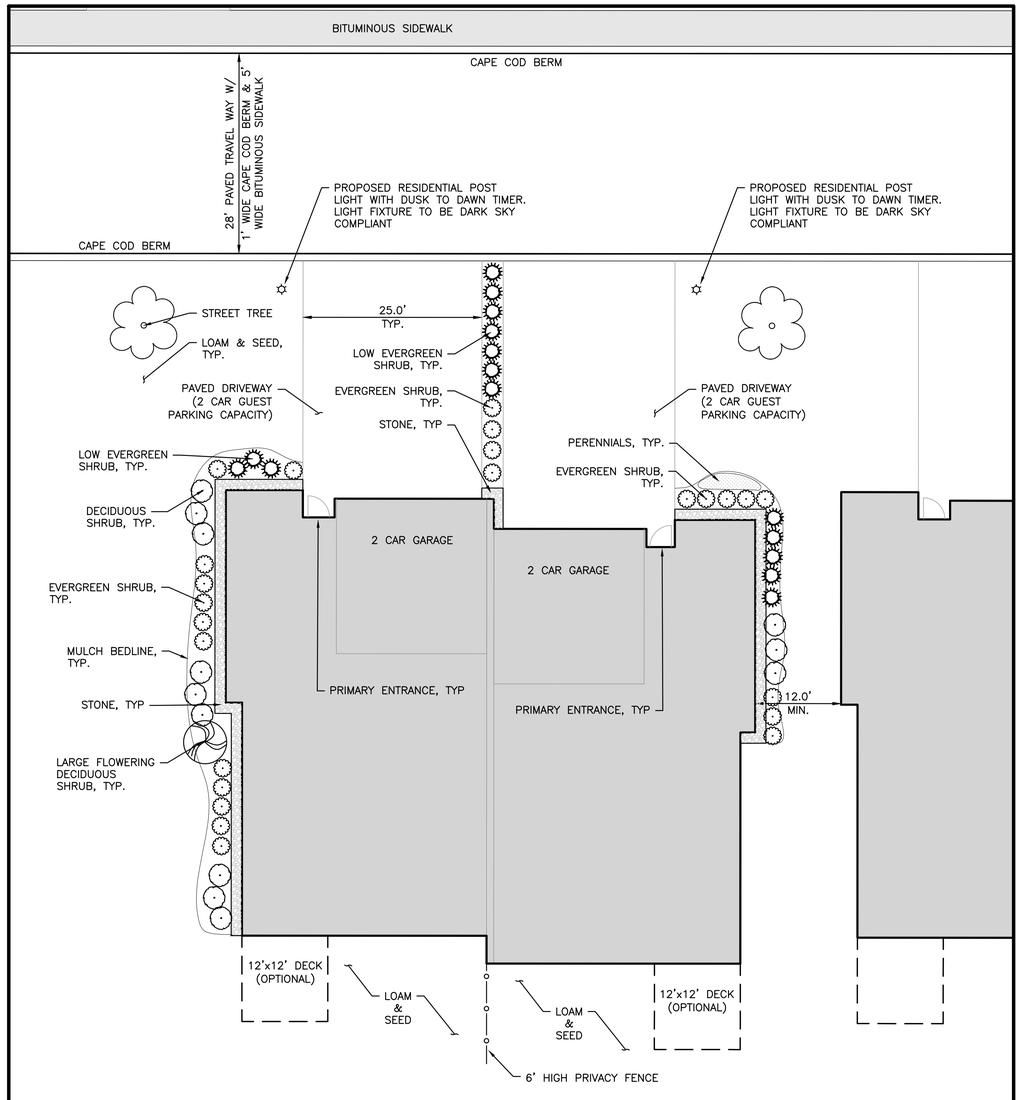

TYPICAL LAYOUT & LANDSCAPE KEY PLAN

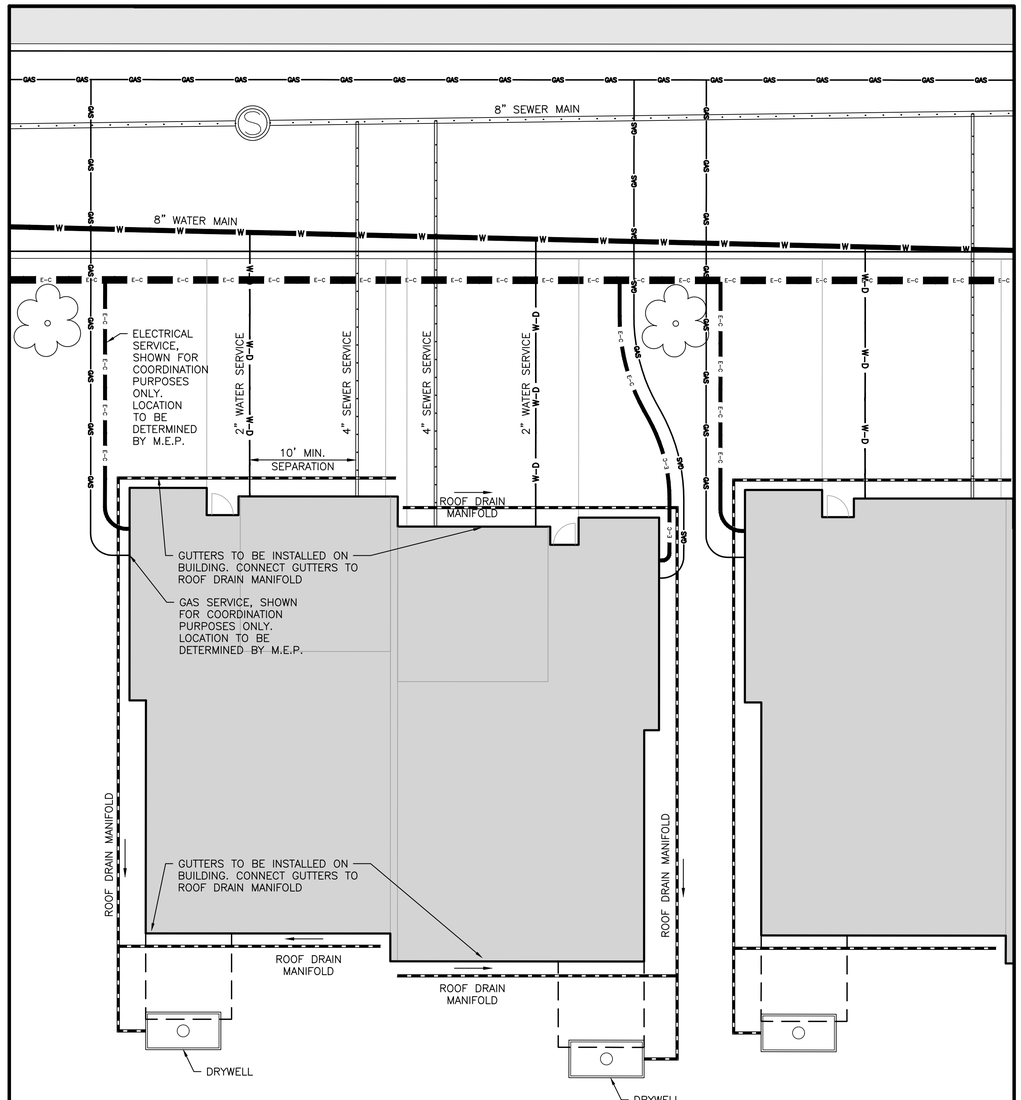

TYPICAL DRAINAGE & UTILITIES KEY PLAN

GRAPHIC SCALE

(IN FEET)
1 inch = ## ft.

APPROVAL UNDER SITE PLAN APPROVAL REQUIRED. SUBJECT TO A COVENANT TO BE RECORDED HEREWITH.

DATE: _____

LEICESTER PLANNING BOARD

I CERTIFY THAT NO NOTICE OF APPEAL WAS RECEIVED DURING THE TWENTY (20) RECORDING DAYS NEXT AFTER RECEIPT AND OF NOTICE FROM THE PLANNING BOARD OF THE APPROVAL OF THIS PLAN

TOWN CLERK – TOWN OF LEICESTER

COMMONWEALTH OF MASSACHUSETTS
MICHAEL A. MALYNOWSKI
CIVIL
No. 47269
REGISTERED PROFESSIONAL ENGINEER

Digitally signed by Michael Malynowski
Date: 2022.02.06 21:17:29 -05'00'

PROFESSIONAL ENGINEER FOR
ALLEN & MAJOR ASSOCIATES, INC.

REV	DATE	DESCRIPTION
4	02-07-22	MISC. REVISIONS PER TOWN COMMENTS
3	12-14-21	MISC. REVISIONS PER TOWN COMMENTS
2	11-10-21	MISC. REVISIONS PER TOWN COMMENTS
1	10-05-21	MISC. REVISIONS PER TOWN COMMENTS

APPLICANT:

MKEP 770 LLC
265 SUNRISE HIGHWAY, SUITE 1368
ROCKVILLE CENTER, NY 11570

PROJECT:

SKYVIEW ESTATES
RESIDENTIAL DEVELOPMENT
MAIN STREET
LEICESTER, MA

PROJECT NO.	2889-01	DATE:	09-17-21
SCALE:	1" = ##'	DWG. :	C2889-01_Building Keys
DESIGNED BY:	SM	CHECKED BY:	MAM

PREPARED BY:

ALLEN & MAJOR ASSOCIATES, INC.
civil engineering ♦ land surveying
environmental consulting ♦ landscape architecture
www.allenmajor.com
100 COMMERCE WAY, SUITE 5
WOBURN MA 01801
TEL: (781) 935-6889
FAX: (781) 935-2896

WOBURN, MA ♦ LAKEVILLE, MA ♦ MANCHESTER, NH

THIS DRAWING HAS BEEN PREPARED IN DIGITAL FORMAT. CLIENT/CLIENT'S REPRESENTATIVE OR CONSULTANTS MAY BE PROVIDED COPIES OF DRAWINGS AND SPECIFICATIONS FOR HIS/HER INFORMATION AND/OR SPECIFIC USE ON THIS PROJECT. DUE TO THE POTENTIAL THAT THE PROVIDED INFORMATION MAY BE MODIFIED UNINTENTIONALLY OR OTHERWISE, ALLEN & MAJOR ASSOCIATES, INC. MAY REMOVE ALL INDICATION OF THE DOCUMENT'S AUTHORSHIP ON THE DIGITAL MEDIA. PRINTED REPRESENTATIONS OR PORTABLE DOCUMENT FORMAT OF THE DRAWINGS AND SPECIFICATIONS ISSUED SHALL BE THE ONLY RECORD COPIES OF ALLEN & MAJOR ASSOCIATES, INC.'S WORK PRODUCT.

DRAWING TITLE: TYPICAL BUILDING KEY PLANS

SHEET No. C-001

Copyright © 2022 Allen & Major Associates, Inc.
All Rights Reserved

R:\PROJECTS\2889-01\CIVIL\DRAWINGS\CURRENT\C-2889-01_BUILDING KEYS.DWG

LOAM AND SEEDING NOTES (GENERAL LAWN MIX):

CONTRACTOR SHALL SEED ALL DISTURBED AREAS NOT NOTED TO RECEIVE OTHER MATERIALS, AND AT AREAS SHOWN ON THE PLAN PER SPECIFICATIONS BELOW

GENERAL LAWN MIX

SCIENTIFIC NAME	COMMON NAME	PROPORTION	PERCENT PURITY	PERCENT GERMINATION	PERCENT BY WEIGHT
FESTUCA RUBRA "RUBRA"	CREEPING RED FESCUE	37%	95%		90%
PAO PRAENTENSIS "BARON"	BARON KENTUCKY BLUEGRASS	40%	85%		90%
LOLIUM PERENNE "PALMER"	PALMER PERENNIAL RYEGRASS	15%	95%		90%
FESTUCA RUBRA COMMUTATA WILMA	WILMA CHEWINGS	8%	95%		80%

1. SEED TO BE SPREAD AT MINIMUM RATE OF 5 LBS. PER 1000 SQ. FT.
2. ALL SEEDING (INCLUDING NEW ENGLAND WETLAND MIX SEEDS) TO BE COMPLETED "IN SEASON" BETWEEN APRIL 1 TO JUNE 15 OR AUGUST 15 TO OCTOBER 1, EXCEPT FOR RE-SEEDING OF BARE SPOTS. AT ALL SLOPED AREAS CONTRACTOR TO INSTALL COCONUT FIBER JUTE MESH NETTING ON ALL SLOPES 3:1 AND OVER, HYDROSEED ALL EXPOSED AREAS, ADD SOIL STABILIZER "FLUX TERRA HP-FGM SOIL STABILIZER" AS MANUFACTURED BY "PROFILE" TO HYDROSEED (AT RATE OF 3,000 LBS PER ACRE), AT NO ADDITIONAL COST TO THE OWNER. CONTRACTOR TO ALSO BE RESPONSIBLE FOR RE-GRADING AND RE-SEEDING ALL DISTURBED, ERODED, OR BARE SPOTS AT NO ADDITIONAL COST TO OWNER & UNTIL SLOPES ARE FULLY STABLE. CONTRACTOR RESPONSIBLE FOR ALL MAINTENANCE UNTIL FINAL ACCEPTANCE OF LAWN AREAS INCLUDING: WATERING, ADDING FERTILIZERS AND LIME AND MOWING AT NO ADDITIONAL COST TO OWNER. AFTER SEEDING, SEEDED AREAS TO BE LIGHTLY MULCHED WITH WEED FREE STRAW & CONTINUALLY WATERED EVERY DAY FOR 2 MONTHS (USE NO HAY) SO THAT SEED IS KEPT MOIST.
3. COMMERCIAL FERTILIZER SHALL BE APPLIED AT THE RATE OF 25 POUNDS PER 1000 SQ. FT. OR AS RECOMMENDED BY THE TESTING AGENCY. LIME TO BE SPREAD AT THE RATE OF 100 POUNDS PER 1000 SQ. FT OR AS RECOMMENDED BY THE TESTING AGENCY. COMMERCIAL FERTILIZER SHALL BE A COMPLETE FERTILIZER CONTAINING AT LEAST 50% OF THE NITROGEN OF WHICH IS DERIVED FROM NATURAL ORGANIZE SOURCES OF UREAFORM. IT SHALL CONTAIN THE FOLLOWING PERCENTAGES BY WEIGHT: NITROGEN (N) 10%, PHOSPHORUS (P) 6%, POTASH (K) 4%. LIME SHALL BE AN APPROVED AGRICULTURAL LIMESTONE CONTAINING NOT LESS THAN 85% OF TOTAL CARBONATES. LIMESTONE SHALL BE GROUND TO SUCH FINENESS THAT 50% WILL PASS A 100 MESH SIEVE AND 90% WILL PASS THROUGH A 20 MESH SIEVE.
4. LAWN AREAS TO BE SEEDED BY SOWING EVENLY WITH AN APPROVED MECHANICAL SEEDER AT THE RATE OF TEN POUNDS PER 1000 SQUARE FEET.
5. CONTRACTOR RESPONSIBLE FOR WATERING, MOWING, AND RESEEDING OF LAWN BARE SPOTS UNTIL A UNIFORM, HEALTHY STAND OF GRASS IS ESTABLISHED AND ACCEPTED.

SEEDING OF SLOPE AREAS:

1. SEEDING SHALL OCCUR IN THE DRY & AFTER SLOPES ARE COMPACTED. IT IS IMPORTANT THAT THE SLOPES ARE SEEDED AT THE BEGINNING OF THE PROJECT. THE SEED WILL NEED A MIN. OF 6 MONTHS TO INITIALLY ESTABLISH PRIOR TO OCCUPANCY SO THAT THERE IS LIMITED EROSION & SLOPE FAILURE. INSTALL NEW ENGLAND EROSION CONTROL /RESTORATION MIX FOR DRY SITES, WILDFLOWER MIX, AND DETENTION MIX PER PLAN AND SPREAD AT A RATIO OF 1 LB PER 600 SQ. FT. LIGHTLY RAKE SOIL TO ENSURE GOOD SEED-TO-SOIL CONTACT.
2. ALL SEEDING TO BE COMPLETED "IN SEASON" BETWEEN APRIL 1 TO JUNE 15 OR AUGUST 15 TO OCTOBER 1, EXCEPT FOR RE-SEEDING OF BARE SPOTS. AT ALL SLOPED AREAS CONTRACTOR TO INSTALL COCONUT FIBER JUTE MESH NETTING ON ALL SLOPES EQUAL TO 3:1 AND GREATER, HYDROSEED ALL EXPOSED AREAS, ADD SOIL STABILIZER "FLUX TERRA HP-FGM SOIL STABILIZER" AS MANUFACTURED BY "PROFILE" TO HYDROSEED (AT RATE OF 3,000 LBS PER ACRE), AT NO ADDITIONAL COST TO THE OWNER. CONTRACTOR TO ALSO BE RESPONSIBLE FOR RE-GRADING AND RE-SEEDING ALL DISTURBED, ERODED, OR BARE SPOTS AT NO ADDITIONAL COST TO OWNER & UNTIL SLOPES ARE FULLY CONTRACTOR RESPONSIBLE FOR ALL MAINTENANCE UNTIL FINAL ACCEPTANCE OF LAWN AREAS INCLUDING: WATERING, ADDING FERTILIZERS AND LIME AND MOWING AT NO ADDITIONAL COST TO OWNER.
3. AFTER SEEDING, ALL AREAS TO BE LIGHTLY MULCHED WITH WEED FREE STRAW & CONTRACTOR RESPONSIBLE TO KEEP WATERED EVERY DAY UNTIL SEED IS ESTABLISHED & APPROVED BY A&M LANDSCAPE ARCHITECT (USE NO HAY) SO THAT SEED IS KEPT MOIST. FOR SPREADING OF THE SEED WITH DRY DETENTION BASINS, WATER LEVELS MAY BE LOWERED IN THE DETENTION AREAS BY RELYING ON DRY SEASON AND OR DRY SPELLS; OR MAY BE ACCOMPLISHED THROUGH THE USE OF DEWATERING METHODS. CONTRACTOR SHALL SUBMIT SHOP DRAWINGS OF ANY DEWATERING METHODS FOR REVIEW AND APPROVAL PRIOR TO CONSTRUCTION. WATER FROM ANY DEWATERING OPERATION SHALL BE TREATED TO REDUCE TOTAL SUSPENDED SOLIDS AND BE IN COMPLIANCE WITH STATE AND FEDERAL STANDARDS.

SURFACE TREATMENT KEY

- LAWN GRASS–PERRENIAL RYE/FESCUE/KENTUCKY BLUEGRASS MIX.
- EROSION CONTROL GRASS (NEW ENGLAND EROSION CONTROL AND RESTORATION MIX FOR WET SITES) TO BE USED ON ANY GRASSED DRAINAGE SWALES OR INTERIOR OF DRAINAGE BASINS
- EROSION CONTROL GRASS (NEW ENGLAND EROSION CONTROL AND RESTORATION MIX FOR DRY SITES) FOR SIDESLOPES GRADED FROM 3: 1 TO 2:1 (MAX.). APPLIED WITH A BONDED FIBER MATRIX/HYDROSEEDED OR BIODEGRADEABLE ENVIRONMENTAL MATTING.
- STONE RIPRAP PER CONSTRUCTION DETAILS
- GRAVEL ACCESS – 12" DEPTH OF CLEAN COMPACTED GRAVEL
- IMPERVIOUS COVER – ROOF OR PAVEMENT PER CONSTRUCTION DETAILS
- EXISTING TREELINE
- PROPOSED TREELINE

SEED MIX SPECIFICATIONS FOR SLOPES AREAS

WWW.NEWP.COM OR
Ph: (413) 548-8000 | Fx: (413) 549-4000 | info@newp.com
New England Wetland Plants, Inc.
820 West Street
Amherst, MA 01002

NEW ENGLAND EROSION CONTROL / RESTORATION MIX FOR DRY SITES:

1. UPLAND BENTGRASS — AGROSTIS PERENNANS
2. ROUGH BENTGRASS/TICKLEGRASS — AGROSTIS SCABRA
3. BLUE GRAMA — BOUTELOUA GRACILIS
4. CANADA WILD RYE — ELYMUS CANADENSIS
5. CREEPING RED FESCUE — FESTUCA RUBRA
6. ANNUAL RYEGRASS (NATURALIZED) — LOLIUM MULTIFLORUM
7. PERENNIAL RYEGRASS (NATURALIZED) — LOLIUM PERENNE
8. LITTLE BLUESTEM — SCHIZACHYRIUM SCOPARIUM
9. INDIAN GRASS — SORGHASTRUM NUTANS

(BY NEW ENGLAND WETLAND PLANTS INC)
EROSION CONTROL/RESTORATION MIX FOR DETENTION BASINS AND MOIST SITES:

A. ELYMUS VIRGINICUS	VIRGINIA WILD RYE
B. FESTUCA RUBRA	CREEPING RED FESCUE
C. SCHIZACHYRIUM SCOPARIUM	LITTLE BLUESTEM
D. ANDROPOGON GERARDII	BIG BLUESTEM
E. PANICUM VIRGATUM	SWITCH GRASS
F. VERBENA HASTATA	BLUE VERVAIN
G. AGROSTIS SCABRA	ROUGH BENTGRASS
H. ASTER NOVAE-ANGLIAE	NEW ENGLAND ASTER
I. EUPATORIUM MACULATUM	SPOTTED JOE PYE WEED
J. EUPATORIUM PERFOLIATUM	BONESET
K. JUNCUS EFFUSUS	SOFT RUSH
L. SCIRPUS CYPERINUS	WOOL GRASS

SHOWY NEW ENGLAND WILDFLOWER MIX

SCHIZACHYRIUM SCOPARIUM	LITTLE BLUESTEM
CHAMAECRISTA FASCICULATA	PARTRIDGE PEA
SORGHASTRUM NUTANS	INDIAN GRASS
FESTUCA RUBRA	RED FESCUE
ELYMUS CANADENSIS	CANADA WILD RYE
ELYMUS RIPARIUS	RIVERBANK WILD RYE
HELIOPSIS HELIANTHOIDES	OX EYE SUNFLOWER
COREOPSIS LANCEOLATA	LANCE LEAVED COREOPSIS
RUDBECKIA HIRTA	BLACK EYED SUSAN
LIATRIS SPICATA	SPIKED GAYFEATHER/MARSH BLAZING STAR
ASCLEPIAS SYRIACA	COMMON MILKWEED
VERNONIA NOVEBORACENSIS	NEW YORK IRONWEED
ASTER NOVAE-ANGLIAE (SYMPHYOTRICHUM)	NOVAE-ANGLIA NEW ENGLAND ASTER F
EUPATORIUM PURPUREUM (EUTROCHIUM MACULATUM)	PURPLE JOE PYE WEED
ASCLEPIAS TUBEROSA	BUTTERFLY MILKWEED
SOLIDAGO JUNCEA	EARLY GOLDENROD
EUPATORIUM PERFOLIATUM	BONESET

LANDSCAPE NOTES

1. ALL WORK SHALL BE IN ACCORDANCE WITH THE REQUIREMENTS OF THE TOWN OF LEICESTER, MA.
2. PLANTING PLAN IS DIAGRAMMATIC IN NATURE. FINAL PLACEMENT OF PLANTS TO BE APPROVED BY THE LANDSCAPE ARCHITECT IN THE FIELD.
3. THE CONTRACTOR SHALL BE RESPONSIBLE FOR CONTACTING ALL UTILITY COMPANIES, ANY PERMITTING AGENCIES, AND "DIG-SAFE" (1-888-344-7233) AT LEAST 72 HOURS IN ADVANCE OF ANY WORK THAT WILL REQUIRE EXCAVATION. CONTRACTOR SHALL NOTIFY THE OWNERS REPRESENTATIVE OF NAY CONFLICTS IN WRITING.
4. NO PLANT MATERIAL SHALL BE INSTALLED UNTIL ALL GRADING AND CONSTRUCTION HAS BEEN COMPLETED IN THE IMMEDIATE AREA, ANY TREES NOTED AS "SEAL OR SELECTED SPECIMEN" SHALL BE TAGGED AND SEALED BY THE LANDSCAPE ARCHITECT.
5. ALL TREES SHALL BE BALLED AND BURLAPPED (B&B) UNLESS OTHERWISE NOTED OR APPROVED BY THE OWNER'S REPRESENTATIVE AND LANDSCAPE ARCHITECT.
6. CONTRACTOR SHALL VERIFY QUANTITIES SHOWN ON PLANT LIST. QUANTITIES SHOWN ON PLANS SHALL GOVERN OVER PLANT LIST.
7. ALL PLANT MATERIALS INSTALLED SHALL MEET THE GUIDELINES ESTABLISHED BY THE STANDARDS FOR NURSERY STOCK PUBLISHED BY THE AMERICAN ASSOCIATION OF NURSERYMEN.
8. ALL PLANT MATERIALS SHALL BE GUARANTEED FOR ONE YEAR FOLLOWING DATE OF ACCEPTANCE. ANY PLANT MATERIALS WHICH DIE WITHIN THE ONE YEAR PLANT GUARANTEE PERIOD WILL BE REPLACED BY THE LANDSCAPE CONTRACTOR AT NO ADDITIONAL COST TO THE OWNERS. OWNERS TO COORDINATE DIRECTLY WITH THE LANDSCAPE CONTRACTOR FOR REPLACEMENT PLANTINGS.
9. ALL DISTURBED AREAS NOT OTHERWISE NOTED SHALL RECEIVE 6" OF SUITABLE LOAM & SEED. LAWNS WITH 3:1 OR GREATER SLOPES SHALL BE PROTECTED WITH AN EROSION CONTROL BLANKET.
10. ANY FALL TRANSPLANTING HAZARD PLANTS SHALL BE DUG IN THE SPRING AND STORED FOR FALL PLANTING.
11. TREES SHALL HAVE A MINIMUM CALIPER AS INDICATED ON THE PLANTING SCHEDULE TAKEN ONE FOOT ABOVE THE ROOT CROWN.
12. ALL PLANT BEDS AND TREE SAUCERS TO RECEIVE 3" OF PINE BARK MULCH. GROUND COVER AREAS SHALL RECEIVE 1" OF PINE BARK MULCH
13. ALL DECIDUOUS TREES ADJACENT TO WALKWAYS AND ROADWAYS SHALL HAVE A BRANCHING PATTERN TO ALLOW FOR A MINIMUM OF 7' OF CLEARANCE BETWEEN THE GROUND AND THE LOWEST BRANCH.
14. ALL TREE STAKES SHALL BE STAINED DARK BROWN.
15. CONTRACTOR RESPONSIBLE FOR WATERING, AND RESEEDING OF BARE SPOTS UNTIL A UNIFORM STAND OF VEGETATION IS ESTABLISHED AND ACCEPTED.
16. ALL PARKING ISLANDS PLANTED WITH SHRUBS SHALL HAVE 18" OF TOP SOIL. FINISH GRADE SHALL BE EQUAL TO THE TOP OF CURB.
17. SOIL SAMPLES, TESTS, AND SHOP DRAWINGS SHALL BE PROVIDED TO THE LANDSCAPE ARCHITECT OR THE OWNER FOR APPROVAL PRIOR TO CONSTRUCTION.
18. AN MINIMUM 18" WIDE BARRIER OF 1-1/2" GRAY OR TAN PEASTONE SHALL BE INSTALLED IN ALL PLANT BEDS WHICH DIRECTLY ABUT THE BUILDINGS. NO MULCH IS ALLOWED WITHIN 18" OF ALL BUILDINGS PER THE LATEST EXECUTIVE OFFICE OF PUBLIC SAFETY AND SECURITY DEPARTMENT OF FIRE SERVICES REGULATION (527 CMR 17.00). INSTALL 6" DEEP OF PEASTONE WITH MIRAFI WEED FABRIC BENEATH AND STEEL EDGING BETWEEN THE PEASTONE AND ADJACENT MULCH BED. PROVIDE SHOP DRAWINGS TO A&M FOR APPROVAL PRIOR TO PURCHASE OF PEASTONE, MIRAFI WEED FABIRC & STEEL EDGING.

GRAPHIC SCALE
80 0 40 80 160 320
(IN FEET)
1 inch = 80 ft.

APPROVAL UNDER SITE PLAN APPROVAL REQUIRED. SUBJECT TO A COVENANT TO BE RECORDED HEREWITH.

DATE: _____

LEICESTER PLANNING BOARD

I CERTIFY THAT NO NOTICE OF APPEAL WAS RECEIVED DURING THE TWENTY (20) RECORDING DAYS NEXT AFTER RECEIPT AND OF NOTICE FROM THE PLANNING BOARD OF THE APPROVAL OF THIS PLAN

TOWN CLERK – TOWN OF LEICESTER

COMMONWEALTH OF MASSACHUSETTS MICHAEL A. MALYNOWSKI CIVIL No. 47269 REGISTERED PROFESSIONAL ENGINEER
Digitally signed by Michael Malynowski
Date: 2022.02.06 21:17:29 -05'00'

PROFESSIONAL ENGINEER FOR
ALLEN & MAJOR ASSOCIATES, INC.

REV	DATE	DESCRIPTION
4	02-07-22	MISC. REVISIONS PER TOWN COMMENTS
3	12-14-21	MISC. REVISIONS PER TOWN COMMENTS
2	11-10-21	MISC. REVISIONS PER TOWN COMMENTS
1	10-05-21	MISC. REVISIONS PER TOWN COMMENTS

APPLICANT:
MKEP 770 LLC
265 SUNRISE HIGHWAY, SUITE 1368
ROCKVILLE CENTER, NY 11570

PROJECT:
SKYVIEW ESTATES RESIDENTIAL DEVELOPMENT
MAIN STREET
LEICESTER, MA

PROJECT NO.	2889-01	DATE:	09-17-21
SCALE:	1" = 80'	DWG. : C-2889-01_Site-Prep	
DESIGNED BY:	SM	CHECKED BY:	MAM

PREPARED BY:
ALLEN & MAJOR ASSOCIATES, INC.
civil engineering ♦ land surveying
environmental consulting ♦ landscape architecture
www.allenmajor.com
100 COMMERCE WAY, SUITE 5
WOBURN MA 01801
TEL: (781) 935-6889
FAX: (781) 935-2896
WOBURN, MA ♦ LAKEVILLE, MA ♦ MANCHESTER, NH

THIS DRAWING HAS BEEN PREPARED IN DIGITAL FORMAT. CLIENT/CLIENT'S REPRESENTATIVE OR CONSULTANTS MAY BE PROVIDED COPIES OF DRAWINGS AND SPECIFICATIONS FOR HIS/HER INFORMATION AND/OR SPECIFIC USE ON THIS PROJECT. DUE TO THE POTENTIAL THAT THE PROVIDED INFORMATION MAY BE MODIFIED UNINTENTIONALLY OR OTHERWISE, ALLEN & MAJOR ASSOCIATES, INC. MAY REMOVE ALL INDICATION OF THE DOCUMENT'S AUTHORSHIP ON THE DIGITAL MEDIA. PRINTED REPRESENTATIONS OR PORTABLE DOCUMENT FORMAT OF THE DRAWINGS AND SPECIFICATIONS ISSUED SHALL BE THE ONLY RECORD COPIES OF ALLEN & MAJOR ASSOCIATES, INC.'S WORK PRODUCT.

DRAWING TITLE:
VEGETATION MANAGEMENT PLAN

SHEET No.
C-002

Copyright © 2022 Allen & Major Associates, Inc.
All Rights Reserved

R:\PROJECTS\2889-01\CIVIL\DRAWINGS\CURRENT\C-2889-01_SITE-PREP.DWG

GENERAL CONSTRUCTION SEQUENCE

ADVANCEMENT OF ROADWAY CONSTRUCTION AND ASSOCIATED INFRASTRUCTURE SHALL FOLLOW THE GENERAL SEQUENCE NOTED BELOW.

PHASE 1A – SKYVIEW DRIVE STA. 0+00 TO 11+50

1. THE LIMITS OF CLEARING SHALL BE STAKED OUT PRIOR TO ANY CONSTRUCTION.
2. INSTALL EROSION CONTROL BARRIERS AS DEPICTED HEREON.
3. INSTALL STONE CONSTRUCTION ENTRANCE PER DETAILS AT ANTICIPATED CONSTRUCTION ENTRANCES.
4. THE CONTRACTOR SHALL COORDINATE A SITE MEETING WITH THE TOWN LEICESTER PLANNING BOARD AGENT (QUINN ENGINEERING, INC.), CONSERVATION COMMISSION REPRESENTATIVE, HIGHWAY DEPARTMENT, AND ALLEN & MAJOR ASSOCIATES, INC. FOR REVIEW AND APPROVAL OF THE EROSION CONTROLS AND LIMIT OF WORK FOR THE PROJECT PRIOR TO ANY TREE CLEARING AND CONSTRUCTION ACTIVITIES.
5. CUT TREES AND REMOVE STUMPS PER THE STUMP REMOVAL NOTES SHOWN HEREON. CLEAR THE AREAS FOR THE TEMPORARY SEDIMENT BASINS AND TEMPORARY SWALES
6. CONSTRUCT TEMPORARY STORMWATER DIVERSION BERM AND TEMPORARY SEDIMENT BASIN FOR THE PROJECT.
7. COMPLETE CLEARING OPERATIONS WITHIN ROADWAY LIMITS OF WORK FOR PROJECT.
8. STRIP AND STOCKPILE TOPSOIL FOR WITHIN ROADWAY AND DRAINAGE BASIN AREAS. STABILIZE TOPSOIL NOT SUBJECT TO IMMEDIATE USE WITH A TEMPORARY SEEDING MIXTURE. ALL STOCKPILES SHALL BE RINGED WITH SILT FENCE.
9. MASS GRADING – PERFORM EARTHWORK CUT TO FILLS FOR ROADWAY AND DRAINAGE BASINS AS DEPICTED HEREON. STABILIZE DISTURBED AREAS BY HAY AND SEED IN ACCORDANCE WITH THE ORDER OF CONDITIONS AND PROJECT PLANS.
10. INSTALL INFRASTRUCTURE IMPROVEMENTS FOR THE PROJECT (INCLUDING ROADWAY GRADING, STORM WATER PIPING AND BASINS, ETC.) AS DEPICTED HEREON.

PHASE 1B – SKYVIEW DRIVE STA. 11+50 TO 24+00 & SKYVIEW TERRACE

1. THE LIMITS OF CLEARING SHALL BE STAKED OUT PRIOR TO ANY CONSTRUCTION.
2. INSTALL EROSION CONTROL BARRIERS AS DEPICTED HEREON.
3. INSTALL EROSION CONTROL MEASURES WITHIN NEWLY CONSTRUCTED ROADWAY STRUCTURES
4. INSTALL STONE CONSTRUCTION ENTRANCE PER DETAILS AT ANTICIPATED CONSTRUCTION ENTRANCES.
5. CUT TREES AND REMOVE STUMPS PER THE STUMP REMOVAL NOTES SHOWN HEREON. CLEAR THE AREAS FOR THE TEMPORARY SEDIMENT BASINS AND TEMPORARY SWALES
6. CONSTRUCT TEMPORARY STORMWATER DIVERSION BERM AND TEMPORARY SEDIMENT BASIN FOR THE PROJECT.
7. COMPLETE CLEARING OPERATIONS WITHIN ROADWAY LIMITS OF WORK FOR PROJECT.
8. STRIP AND STOCKPILE TOPSOIL FOR WITHIN ROADWAY AND DRAINAGE BASIN AREAS. STABILIZE TOPSOIL NOT SUBJECT TO IMMEDIATE USE WITH A TEMPORARY SEEDING MIXTURE. ALL STOCKPILES SHALL BE RINGED WITH SILT FENCE.
9. MASS GRADING – PERFORM EARTHWORK CUT TO FILLS FOR ROADWAY AND DRAINAGE BASINS AS DEPICTED HEREON. STABILIZE DISTURBED AREAS BY HAY AND SEED IN ACCORDANCE WITH THE ORDER OF CONDITIONS AND PROJECT PLANS.
10. INSTALL INFRASTRUCTURE IMPROVEMENTS FOR THE PROJECT (INCLUDING ROADWAY GRADING, STORM WATER PIPING AND BASINS, ETC.) AS DEPICTED HEREON.

PHASE 1C – SKYVIEW DRIVE STA. 24+00 TO 25+50 & EMERGENCY ACCESS

1. THE LIMITS OF CLEARING SHALL BE STAKED OUT PRIOR TO ANY CONSTRUCTION.
2. INSTALL EROSION CONTROL BARRIERS AS DEPICTED HEREON.
3. INSTALL EROSION CONTROL MEASURES WITHIN NEWLY CONSTRUCTED ROADWAY STRUCTURES
4. INSTALL STONE CONSTRUCTION ENTRANCE PER DETAILS AT ANTICIPATED CONSTRUCTION ENTRANCES.
5. CUT TREES AND REMOVE STUMPS PER THE STUMP REMOVAL NOTES SHOWN HEREON. CLEAR THE AREAS FOR THE TEMPORARY SEDIMENT BASINS AND TEMPORARY SWALES
6. CONSTRUCT TEMPORARY STORMWATER DIVERSION BERM AND TEMPORARY SEDIMENT BASIN FOR THE PROJECT.
7. COMPLETE CLEARING OPERATIONS WITHIN ROADWAY LIMITS OF WORK FOR PROJECT.
8. STRIP AND STOCKPILE TOPSOIL FOR WITHIN ROADWAY AND DRAINAGE BASIN AREAS. STABILIZE TOPSOIL NOT SUBJECT TO IMMEDIATE USE WITH A TEMPORARY SEEDING MIXTURE. ALL STOCKPILES SHALL BE RINGED WITH SILT FENCE.
9. MASS GRADING – PERFORM EARTHWORK CUT TO FILLS FOR ROADWAY AND DRAINAGE BASINS AS DEPICTED HEREON. STABILIZE DISTURBED AREAS BY HAY AND SEED IN ACCORDANCE WITH THE ORDER OF CONDITIONS AND PROJECT PLANS.
10. INSTALL INFRASTRUCTURE IMPROVEMENTS FOR THE PROJECT (INCLUDING ROADWAY GRADING, STORM WATER PIPING AND BASINS, ETC.) AS DEPICTED HEREON.

PHASE 2 – LOT DEVELOPMENT AND HOME-BUILDING

1. INSTALL EROSION CONTROL BARRIERS AS DEPICTED HEREON.
2. INSTALL EROSION CONTROL MEASURES WITHIN NEWLY CONSTRUCTED ROADWAY STRUCTURES
3. CUT TREES AND REMOVE STUMPS PER THE STUMP REMOVAL NOTES SHOWN HEREON.
4. CONSTRUCT TEMPORARY STORMWATER DIVERSION BERM AND TEMPORARY SEDIMENT BASIN FOR THE PROJECT.
5. CONSTRUCT BUILDING FOUNDATIONS
6. STABILIZE DISTURBED AREAS

LEGEND

- LIMIT OF DISTURBANCE
- LIMIT OF 'CLEAR AND GRUB'
- TEMPORARY FENCE
- TUBULAR BARRIER
- CATCH BASIN FILTER
- STABILIZED ENTRANCE
- STOCKPILE/STAGING AREA

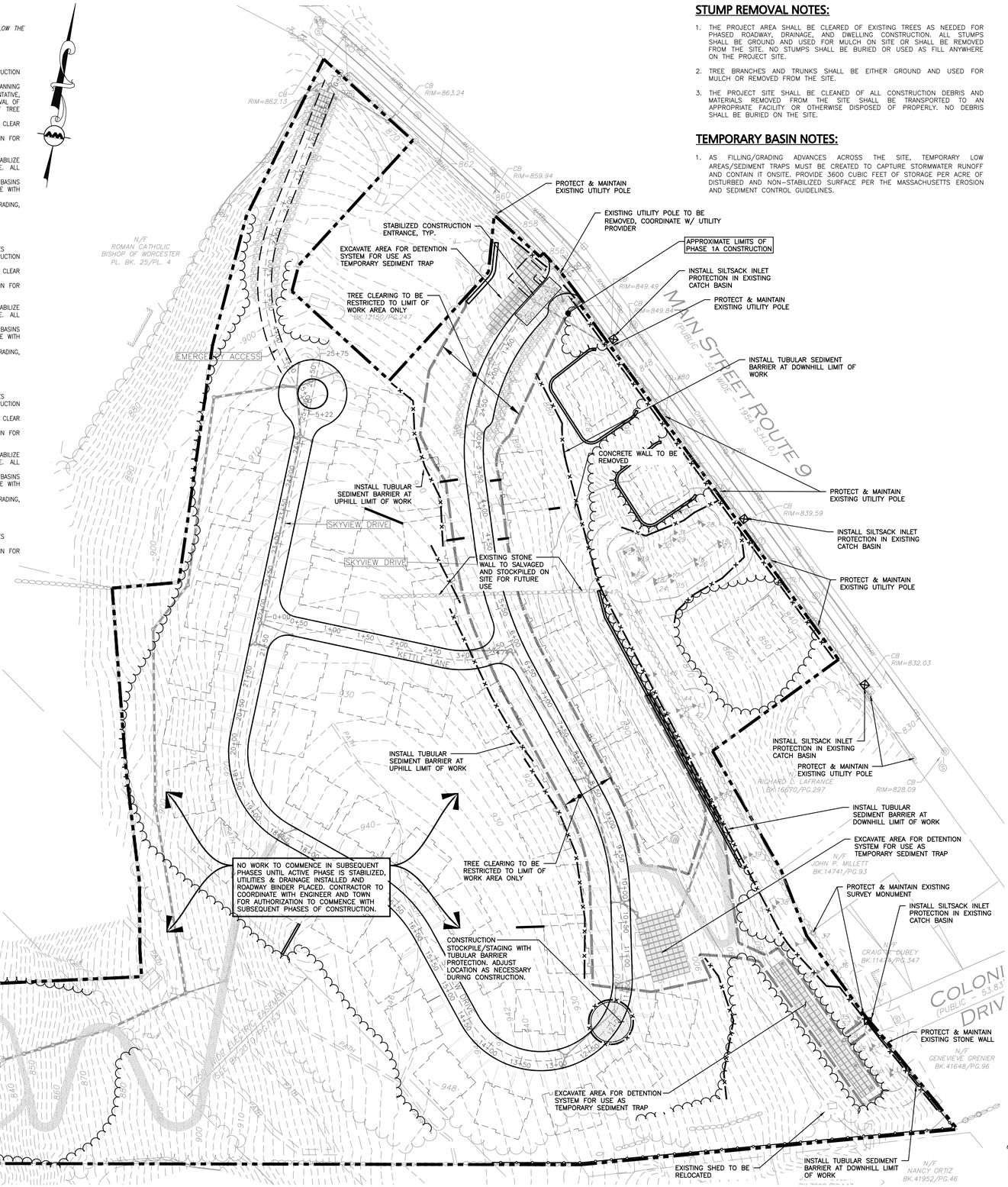

STUMP REMOVAL NOTES:

1. THE PROJECT AREA SHALL BE CLEARED OF EXISTING TREES AS NEEDED FOR PHASED ROADWAY, DRAINAGE, AND DWELLING CONSTRUCTION. ALL STUMPS SHALL BE GROUND AND USED FOR MULCH ON SITE OR SHALL BE REMOVED FROM THE SITE. NO STUMPS SHALL BE BURIED OR USED AS FILL ANYWHERE ON THE PROJECT SITE.
2. TREE BRANCHES AND TRUNKS SHALL BE EITHER GROUND AND USED FOR MULCH OR REMOVED FROM THE SITE.
3. THE PROJECT SITE SHALL BE CLEANED OF ALL CONSTRUCTION DEBRIS AND MATERIALS REMOVED FROM THE SITE SHALL BE TRANSPORTED TO AN APPROPRIATE FACILITY OR OTHERWISE DISPOSED OF PROPERLY. NO DEBRIS SHALL BE BURIED ON THE SITE.

TEMPORARY BASIN NOTES:

1. AS FILLING/GRADING ADVANCES ACROSS THE SITE, TEMPORARY LOW AREAS/SEDIMENT TRAPS MUST BE CREATED TO CAPTURE STORMWATER RUNOFF AND CONTAIN IT ONSITE. PROVIDE 3600 CUBIC FEET OF STORAGE PER ACRE OF DISTURBED AND NON-STABILIZED SURFACE PER THE MASSACHUSETTS EROSION AND SEDIMENT CONTROL GUIDELINES.

EROSION CONTROL NOTES

1. AS THIS PROJECT SHALL ALTER OVER ONE ACRE OF LAND, IT WILL REQUIRE FILING A NOTICE OF INTENT WITH THE EPA UNDER THE NPDES PHASE II PROGRAM AND WILL REQUIRE A STORMWATER POLLUTION PREVENTION PLAN (SWPP) TO BE FILED PRIOR TO ANY LAND DISTURBANCE. THE SWPP SHALL BE PROVIDED TO THE SITE CONTRACTOR PRIOR TO CONSTRUCTION AND SHALL BE ACCESSIBLE ON SITE DURING ALL CONSTRUCTION ACTIVITY.
2. THE CONTRACTOR SHALL REVIEW AND COMPLY WITH ALL REQUIREMENTS OF THE PROJECT "ORDER OF CONDITIONS" AS ISSUED BY THE TOWN OF LEICESTER CONSERVATION COMMISSION. THE CONTRACTOR AND ALL SUB-CONTRACTORS ARE TO BE MADE AWARE OF THE ORDER OF CONDITIONS AS GRANTED BY THE LEICESTER CONSERVATION COMMISSION AND ITS REGULATIONS APPLICABLE: TO THIS PROJECT. A COPY OF THIS ORDER IS TO BE READILY AVAILABLE ON SITE AT ALL TIMES.
3. THE SEDIMENTATION AND EROSION CONTROLS DEPICTED HEREON ARE THE MINIMUM REQUIRED. THE CONTRACTOR IS RESPONSIBLE FOR THE PROPER MAINTENANCE OF ALL EROSION CONTROLS AND SHALL INSTALL ADDITIONAL MITIGATION MEASURES AS MAY BE NECESSARY TO ENSURE PROTECTION OF ALL NATURAL RESOURCES.
4. PRIOR TO THE START OF ANY CONSTRUCTION, ALL SEDIMENTATION AND EROSION CONTROL MEASURES SHALL BE INSTALLED AS DEPICTED HEREON. THE CONTRACTOR SHALL MAINTAIN THESE MEASURES UNTIL ALL WORK IS COMPLETED AND ALL AREAS HAVE BEEN STABILIZED.
5. AT NO TIME SHOULD HEAVY EQUIPMENT CROSS THE EROSION CONTROL BARRIERS OR OPERATE BEYOND THE LIMIT OF WORK DEPICTED HEREON. ALL FUELING OF CONSTRUCTION EQUIPMENT IS TO BE DONE IN THE UPLANDS OUTSIDE OF THE 100' BUFFER ZONE.
6. TEMPORARY STABILIZATION OF DISTURBED AREAS IS TO LIMIT EROSION TOWARD THE WETLAND AREAS. ALL TRENCHES ARE TO BE FILLED ON A DAILY BASIS WITH SPECIAL CARE TAKEN TO AVOID ROUTING RAINFALL THROUGH GULLIES TOWARD THE WETLAND AREAS. TEMPORARY DETENTION BASINS ARE TO BE INSTALLED IN AREAS PRONE TO CHANNEL FLOWS DURING PERIODS OF HIGH INTENSITY RAINFALL.
7. THE CONTRACTOR IS TO USE PROPER JUDGMENT RELATIVE TO CONSTRUCTION PRACTICES DURING ADVERSE WEATHER CONDITIONS OR PERIODS OF HIGH GROUNDWATER. NO WORK IS TO BE PERFORMED NEAR THE WETLAND AREAS DURING PERIODS OF HEAVY RAINFALL.
8. PERIODIC MAINTENANCE OF THE EROSION CONTROL MEASURES IS REQUIRED IN ORDER TO INSURE THE PROPER PROTECTION OF THE RESOURCE: AREAS. ALL EROSION CONTROL STRUCTURES ARE TO BE INSPECTED ON A WEEKLY BASIS OR WHENEVER THERE IS A STORM EVENT EXCEEDING ½"OF RAIN IN TWENTY FOUR HOURS.
9. THE TREE CLEARING REMOVAL LIMITS SHALL NOT EXTEND BEYOND THE SILTFENCE/HAYBALE EROSION CONTROL BARRIERS AND THE LIMIT OF WORK. AREAS OF EXISTING VEGETATION TO REMAIN ARE TO BE PROTECTED THROUGHOUT CONSTRUCTION.
10. THE BASE OF ALL STOCKPILES SHALL BE CONTAINED WITHIN THE EROSION CONTROL MEASURES LIMITS. STOCKPILES TO BE LEFT OVER 30 DAYS SHALL BE SEEDED WITH ANNUAL RYE GRASS.
11. THE FUNCTIONING OF THE TEMPORARY SEDIMENT CONTROLS OR CONSTRUCTION OPERATIONS SHALL NOT CAUSE NOTICEABLE SEDIMENT PLUMES. IF PLUMES OCCUR, THE CONTRACTOR SHALL STOP WORK AND INSTALL ADDITIONAL SEDIMENTATION CONTROLS IMMEDIATELY TO PREVENT FURTHER SEDIMENTATION.
12. THE CONTRACTOR SHALL REMOVE AND DISPOSE OF ALL ACCUMULATED SEDIMENT AS REQUIRED BY THE CONSERVATION COMMISSION OR AS DIRECTED BY THE ENGINEER.
13. AFTER THE CONSTRUCTION/INSTALLATION OF THE PERMANENT DRAINAGE /INFRASTRUCTURE, THE CONTRACTOR SHALL INSTALL AND MAINTAIN THE APPROPRIATE SEDIMENTATION CONTROLS TO PROTECT THE INTEGRITY OF THE STRUCTURES DURING THE ONGOING CONSTRUCT/ON. ALL CATCH BASINS SHALL HAVE A SILT SACK (TYPICAL BASIN FILTER INSTALLED. THE FILTERS SHALL BE MAINTAINED AND/OR REPLACED AS NECESSARY UNTIL THE CONSTRUCTION IS COMPLETED.
14. ALL DISTURBED NON-PAVED AREAS WITHIN THE PROJECT LIMIT OF WORK SHALL BE DRESSED WITH A MINIMUM OF FOUR INCHES (4") OF SCREENED LOAM AND SHALL BE SEEDED WITH AN APPROVED GRASS MIX AND MULCHED AS SOON AS POSSIBLE IN ORDER TO INSURE THE RAPID STABILIZATION OF THE EROSION PRONE AREAS. A CONSERVATION SEED MIXTURE OF 20% ANNUAL RYEGRASS, 30% CREEPING RED FESCUE, 30% CHEWINGS FESCUE AND 20% PERENNIAL RYEGRASS IS RECOMMENDED. IF PERMANENT SEEDING CANNOT BE INSTALLED IMMEDIATELY AFTER FINAL GRADING, THE AREAS ARE TO BE TEMPORARILY MULCHED TO STABILIZE ALL SLOPES UPON COMPLETION OF WORK TO PREVENT EROSION OF SOILS INTO THE RESOURCE AREAS AND THEIR ASSOCIATED BUFFER ZONES. DURING THE GROW-IN PERIOD, TEMPORARY EROSION CONTROLS (I.E. BARK MULCH OR STRAW) IS TO BE USED TO PREVENT EROSION DURING PERIODS OF RAINFALL OR SNOW MELT. WHERE PRACTICAL DURING CONSTRUCTION, DISTURBED AREAS SHALL BE STABILIZED BY TEMPORARILY SEEDING OR MULCHING.
15. ALL DISTURBED AREAS TO BE LEFT DORMANT FOR MORE THAN 60 DAYS SHALL BE STABILIZED BY TEMPORARILY SEEDING OR MULCHING.
16. DEWATERING OPERATIONS, IF REQUIRED SHALL DISCHARGE ONTO STABILIZED AREAS AND ALL DISCHARGE WATER IS TO PASS THROUGH SEDIMENTATION CONTROL DEVICES TO PREVENT IMPACTS UPON THE WETLANDS RESOURCES, DRAINAGE SYSTEMS. AND ABUTTING PROPERTIES.
17. ALL TEMPORARY SEDIMENTATION AND EROSION CONTROL MEASURES SHALL BE REMOVED IN THEIR ENTIRETY AFTER FINAL SITE STABILIZATION AND ISSUANCE OF THE FINAL CERTIFICATE OF COMPLIANCE BY THE CONSERVATION COMMISSION.
18. THE APPLICANT SHALL NOTIFY THE LEICESTER CONSERVATION COMMISSION ONCE THE JURISDICTIONAL WORK HAS BEEN COMPLETED AND ENTIRE SITE HAS BEEN PROPERLY STABILIZED. UPON APPROVAL OF THE WORK SUBJECT TO THE ORDER OF CONDITIONS. THE APPLICANT IS TO RECEIVE A CERTIFICATE OF COMPLIANCE: THAT IS TO BE RECORDED AT THE WORCESTER REGISTRY OF DEEDS.
19. CONTRACTOR SHALL APPLY STABILIZATION FABRIC TO ALL SLOPES 3H:1V OR STEEPER. CONTRACTOR SHALL GRASS DISTURBED AREAS IN ACCORDANCE WITH COUNTY SPECIFICATIONS UNTIL A HEALTHY STAND OF GRASS IS OBTAINED.

GENERAL NOTES:

1. THE CONTRACTOR IS SPECIFICALLY CAUTIONED THAT THE LOCATION AND/OR ELEVATION OF EXISTING UTILITIES AND STRUCTURES AS SHOWN ON THESE PLANS IS BASED ON RECORDS OF VARIOUS UTILITY COMPANIES AND WHERE POSSIBLE, MEASUREMENTS TAKEN IN THE FIELD. THIS INFORMATION IS NOT TO BE RELIED ON AS BEING EXACT OR COMPLETE. THE LOCATION OF ALL UNDERGROUND UTILITIES AND STRUCTURES SHALL BE VERIFIED IN THE FIELD BY THE CONTRACTOR PRIOR TO THE START OF CONSTRUCTION. THE CONTRACTOR MUST CONTACT THE APPROPRIATE UTILITY COMPANY, ANY GOVERNING PERMITTING AUTHORITY, AND "DIGSAFE" AT LEAST 72 HOURS PRIOR TO ANY EXCAVATION WORK TO REQUEST EXACT FIELD LOCATION OF UTILITIES.
2. GRADING / DEMOLITION OUTSIDE OF THE PROJECT BOUNDARIES (IF ANY) REQUIRES A TEMPORARY CONSTRUCTION/GRADING EASEMENT FROM THE LANDOWNER (BY OTHERS).
3. ALTHOUGH CERTAIN ITEMS HAVE BEEN NOTED ON THIS DRAWING FOR DEMOLITION, NO ATTEMPT HAS BEEN MADE TO DELINEATE EACH AND EVERY ITEM THAT REQUIRES DEMOLITION FOR THE COMPLETION OF THE PROJECT. THE CONTRACTOR WILL BE RESPONSIBLE FOR ALL NECESSARY DEMOLITION WORK TO COMPLETE THE PROJECT. ALLEN & MAJOR ASSOCIATES, INC. IS NOT RESPONSIBLE FOR SITE DEMOLITION ITEMS NOT SHOWN ON THE SURVEY, OR SPECIFICALLY NOTED. THE DEMOLITION NOTES AND ARROWS ON THIS PLAN ARE TYPICAL AND DO NOT REFLECT QUANTITY.
4. WRITTEN DIMENSIONS ON THIS PLAN TAKE PRECEDENCE OVER SCALED DIMENSIONS. THE CONTRACTOR SHALL USE CAUTION WHEN SCALING REPRODUCED PLANS. IN THE EVENT OF A CONFLICT BETWEEN THIS PLAN SET AND ANY OTHER DRAWINGS AND/OR SPECIFICATIONS OR CONDITIONS, THE ENGINEER SHALL BE NOTIFIED BY THE CONTRACTOR.
5. THE INFORMATION SHOWN ON THIS PLAN IS THE SOLE PROPERTY OF ALLEN & MAJOR ASSOCIATES, INC. ITS INTENDED USE IS TO PROVIDE INFORMATION. ANY ALTERATION, MISUSE, OR RECALCULATION OF INFORMATION OR DATA WITHOUT THE EXPRESSED, WRITTEN CONSENT OF ALLEN & MAJOR ASSOCIATES, INC. IS STRICTLY PROHIBITED.

GRAPHIC SCALE

80 0 40 80 160 320

(IN FEET)
1 inch = 80 ft.

R:\PROJECTS\2889-01\CIVIL\DRAWINGS\CURRENT\C-2889-01_SITE-PREP.DWG

APPROVAL UNDER SITE PLAN APPROVAL REQUIRED. SUBJECT TO A COVENANT TO BE RECORDED HEREWITH.

DATE: _____

LEICESTER PLANNING BOARD

I CERTIFY THAT NO NOTICE OF APPEAL WAS RECEIVED DURING THE TWENTY (20) RECORDING DAYS NEXT AFTER RECEIPT AND OF NOTICE FROM THE PLANNING BOARD OF THE APPROVAL OF THIS PLAN

TOWN CLERK – TOWN OF LEICESTER

COMMONWEALTH OF MASSACHUSETTS MICHAEL A. MALYNOWSKI CIVIL No. 47269 REGISTERED PROFESSIONAL ENGINEER

Digitally signed by Michael Malynowski
Date: 2022.02.06 21:17:29 -05'00'

PROFESSIONAL ENGINEER FOR ALLEN & MAJOR ASSOCIATES, INC.

REV	DATE	DESCRIPTION
4	02-07-22	MISC. REVISIONS PER TOWN COMMENTS
3	12-14-21	MISC. REVISIONS PER TOWN COMMENTS
2	11-10-21	MISC. REVISIONS PER TOWN COMMENTS
1	10-05-21	MISC. REVISIONS PER TOWN COMMENTS

APPLICANT:

MKEP 770 LLC
265 SUNRISE HIGHWAY, SUITE 1368
ROCKVILLE CENTER, NY 11570

PROJECT:

SKYVIEW ESTATES RESIDENTIAL DEVELOPMENT

MAIN STREET
LEICESTER, MA

PROJECT NO.	2889-01	DATE:	09-17-21
SCALE:	1" = 80'	DWG. :	C-2889-01_Site-Prep
DESIGNED BY:	SM	CHECKED BY:	MAM

PREPARED BY:

ALLEN & MAJOR ASSOCIATES, INC.
civil engineering ♦ land surveying
environmental consulting ♦ landscape architecture
www.allenmajor.com
100 COMMERCE WAY, SUITE 5
WOBURN MA 01801
TEL: (781) 935-6889
FAX: (781) 935-2896

WOBURN, MA ♦ LAKEVILLE, MA ♦ MANCHESTER, NH

THIS DRAWING HAS BEEN PREPARED IN DIGITAL FORMAT. CLIENT/CLIENT'S REPRESENTATIVE OR CONSULTANTS MAY BE PROVIDED COPIES OF DRAWINGS AND SPECIFICATIONS FOR HIS/HER INFORMATION AND/OR SPECIFIC USE ON THIS PROJECT. DUE TO THE POTENTIAL THAT THE PROVIDED INFORMATION MAY BE MODIFIED UNINTENTIONALLY OR OTHERWISE, ALLEN & MAJOR ASSOCIATES, INC. MAY REMOVE ALL INDICATION OF THE DOCUMENT'S AUTHORSHIP ON THE DIGITAL MEDIA. PRINTED REPRESENTATIONS OR PORTABLE DOCUMENT FORMAT OF THE DRAWINGS AND SPECIFICATIONS ISSUED SHALL BE THE ONLY RECORD COPIES OF ALLEN & MAJOR ASSOCIATES, INC.'S WORK PRODUCT.

DRAWING TITLE:

PHASE 1A
SITE PREPARATION PLAN

Copyright © 2022 Allen & Major Associates, Inc.
All Rights Reserved

SHEET No.

C-100

05 OF 30

GENERAL CONSTRUCTION SEQUENCE

ADVANCEMENT OF ROADWAY CONSTRUCTION AND ASSOCIATED INFRASTRUCTURE SHALL FOLLOW THE GENERAL SEQUENCE NOTED BELOW.

PHASE 1A – SKYVIEW DRIVE STA. 0+00 TO 11+50

1. THE LIMITS OF CLEARING SHALL BE STAKED OUT PRIOR TO ANY CONSTRUCTION.
2. INSTALL EROSION CONTROL BARRIERS AS DEPICTED HEREON.
3. INSTALL STONE CONSTRUCTION ENTRANCE PER DETAILS AT ANTICIPATED CONSTRUCTION ENTRANCES.
4. THE CONTRACTOR SHALL COORDINATE A SITE MEETING WITH THE TOWN LEICESTER PLANNING BOARD AGENT (QUINN ENGINEERING, INC.), CONSERVATION COMMISSION REPRESENTATIVE, HIGHWAY DEPARTMENT, AND ALLEN & MAJOR ASSOCIATES, INC. FOR REVIEW AND APPROVAL OF THE EROSION CONTROLS AND LIMIT OF WORK FOR THE PROJECT PRIOR TO ANY TREE CLEARING AND CONSTRUCTION ACTIVITIES.
5. CUT TREES AND REMOVE STUMPS PER THE STUMP REMOVAL NOTES SHOWN HEREON. CLEAR THE AREAS FOR THE TEMPORARY SEDIMENT BASINS AND TEMPORARY SWALES
6. CONSTRUCT TEMPORARY STORMWATER DIVERSION BERM AND TEMPORARY SEDIMENT BASIN FOR THE PROJECT.
7. COMPLETE CLEARING OPERATIONS WITHIN ROADWAY LIMITS OF WORK FOR PROJECT.
8. STRIP AND STOCKPILE TOPSOIL FOR WITHIN ROADWAY AND DRAINAGE BASIN AREAS. STABILIZE TOPSOIL NOT SUBJECT TO IMMEDIATE USE WITH A TEMPORARY SEEDING MIXTURE. ALL STOCKPILES SHALL BE RINGED WITH SILT FENCE.
9. MASS GRADING – PERFORM EARTHWORK CUT TO FILLS FOR ROADWAY AND DRAINAGE BASINS AS DEPICTED HEREON. STABILIZE DISTURBED AREAS BY HAY AND SEED IN ACCORDANCE WITH THE ORDER OF CONDITIONS AND PROJECT PLANS.
10. INSTALL INFRASTRUCTURE IMPROVEMENTS FOR THE PROJECT (INCLUDING ROADWAY GRADING, STORM WATER PIPING AND BASINS, ETC.) AS DEPICTED HEREON.

PHASE 1B – SKYVIEW DRIVE STA. 11+50 TO 24+00 & SKYVIEW TERRACE

1. THE LIMITS OF CLEARING SHALL BE STAKED OUT PRIOR TO ANY CONSTRUCTION.
2. INSTALL EROSION CONTROL BARRIERS AS DEPICTED HEREON.
3. INSTALL EROSION CONTROL MEASURES WITHIN NEWLY CONSTRUCTED ROADWAY STRUCTURES
4. INSTALL STONE CONSTRUCTION ENTRANCE PER DETAILS AT ANTICIPATED CONSTRUCTION ENTRANCES.
5. CUT TREES AND REMOVE STUMPS PER THE STUMP REMOVAL NOTES SHOWN HEREON. CLEAR THE AREAS FOR THE TEMPORARY SEDIMENT BASINS AND TEMPORARY SWALES
6. CONSTRUCT TEMPORARY STORMWATER DIVERSION BERM AND TEMPORARY SEDIMENT BASIN FOR THE PROJECT.
7. COMPLETE CLEARING OPERATIONS WITHIN ROADWAY LIMITS OF WORK FOR PROJECT.
8. STRIP AND STOCKPILE TOPSOIL FOR WITHIN ROADWAY AND DRAINAGE BASIN AREAS. STABILIZE TOPSOIL NOT SUBJECT TO IMMEDIATE USE WITH A TEMPORARY SEEDING MIXTURE. ALL STOCKPILES SHALL BE RINGED WITH SILT FENCE.
9. MASS GRADING – PERFORM EARTHWORK CUT TO FILLS FOR ROADWAY AND DRAINAGE BASINS AS DEPICTED HEREON. STABILIZE DISTURBED AREAS BY HAY AND SEED IN ACCORDANCE WITH THE ORDER OF CONDITIONS AND PROJECT PLANS.
10. INSTALL INFRASTRUCTURE IMPROVEMENTS FOR THE PROJECT (INCLUDING ROADWAY GRADING, STORM WATER PIPING AND BASINS, ETC.) AS DEPICTED HEREON.

PHASE 1C – SKYVIEW DRIVE STA. 24+00 TO 25+50 & EMERGENCY ACCESS

1. THE LIMITS OF CLEARING SHALL BE STAKED OUT PRIOR TO ANY CONSTRUCTION.
2. INSTALL EROSION CONTROL BARRIERS AS DEPICTED HEREON.
3. INSTALL EROSION CONTROL MEASURES WITHIN NEWLY CONSTRUCTED ROADWAY STRUCTURES
4. INSTALL STONE CONSTRUCTION ENTRANCE PER DETAILS AT ANTICIPATED CONSTRUCTION ENTRANCES.
5. CUT TREES AND REMOVE STUMPS PER THE STUMP REMOVAL NOTES SHOWN HEREON. CLEAR THE AREAS FOR THE TEMPORARY SEDIMENT BASINS AND TEMPORARY SWALES
6. CONSTRUCT TEMPORARY STORMWATER DIVERSION BERM AND TEMPORARY SEDIMENT BASIN FOR THE PROJECT.
7. COMPLETE CLEARING OPERATIONS WITHIN ROADWAY LIMITS OF WORK FOR PROJECT.
8. STRIP AND STOCKPILE TOPSOIL FOR WITHIN ROADWAY AND DRAINAGE BASIN AREAS. STABILIZE TOPSOIL NOT SUBJECT TO IMMEDIATE USE WITH A TEMPORARY SEEDING MIXTURE. ALL STOCKPILES SHALL BE RINGED WITH SILT FENCE.
9. MASS GRADING – PERFORM EARTHWORK CUT TO FILLS FOR ROADWAY AND DRAINAGE BASINS AS DEPICTED HEREON. STABILIZE DISTURBED AREAS BY HAY AND SEED IN ACCORDANCE WITH THE ORDER OF CONDITIONS AND PROJECT PLANS.
10. INSTALL INFRASTRUCTURE IMPROVEMENTS FOR THE PROJECT (INCLUDING ROADWAY GRADING, STORM WATER PIPING AND BASINS, ETC.) AS DEPICTED HEREON.

PHASE 2 – LOT DEVELOPMENT AND HOME-BUILDING

1. INSTALL EROSION CONTROL BARRIERS AS DEPICTED HEREON.
2. INSTALL EROSION CONTROL MEASURES WITHIN NEWLY CONSTRUCTED ROADWAY STRUCTURES
3. CUT TREES AND REMOVE STUMPS PER THE STUMP REMOVAL NOTES SHOWN HEREON.
4. CONSTRUCT TEMPORARY STORMWATER DIVERSION BERM AND TEMPORARY SEDIMENT BASIN FOR THE PROJECT.
5. CONSTRUCT BUILDING FOUNDATIONS
6. STABILIZE DISTURBED AREAS

LEGEND

- LIMIT OF DISTURBANCE
- LIMIT OF 'CLEAR AND GRUB'
- TEMPORARY FENCE
- TUBULAR BARRIER
- CATCH BASIN FILTER
- STABILIZED ENTRANCE
- STOCKPILE/STAGING AREA

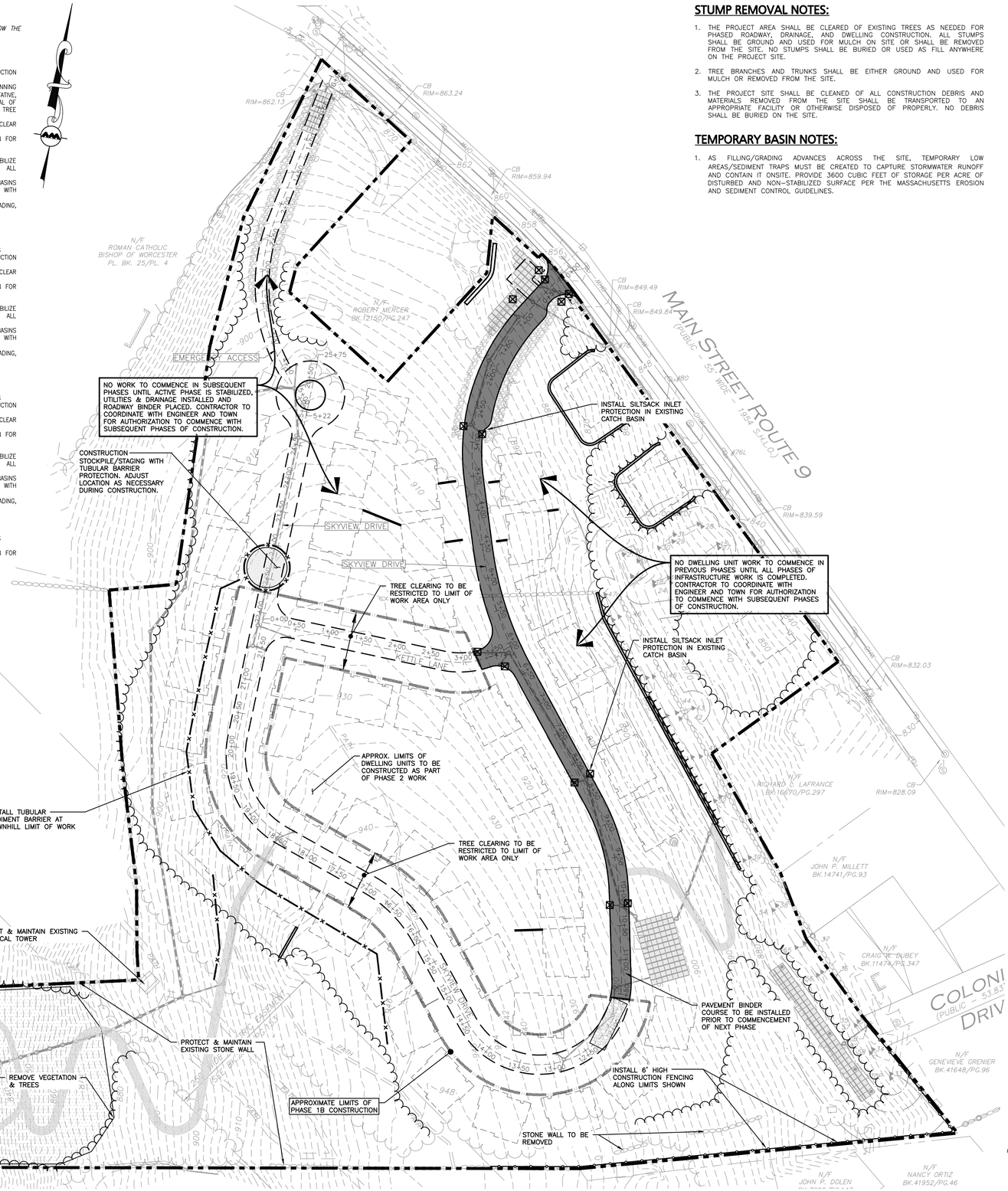

DIG SAFE

BEFORE YOU DIG CALL 811 OR 1-888-DIG-SAFE 1-888-344-7233

R:\PROJECTS\2889-01\CIVIL\DRAWINGS\CURRENT\C-2889-01_SITE-PREP.DWG

STUMP REMOVAL NOTES:

1. THE PROJECT AREA SHALL BE CLEARED OF EXISTING TREES AS NEEDED FOR PHASED ROADWAY, DRAINAGE, AND DWELLING CONSTRUCTION. ALL STUMPS SHALL BE GROUND AND USED FOR MULCH ON SITE OR SHALL BE REMOVED FROM THE SITE. NO STUMPS SHALL BE BURIED OR USED AS FILL ANYWHERE ON THE PROJECT SITE.
2. TREE BRANCHES AND TRUNKS SHALL BE EITHER GROUND AND USED FOR MULCH OR REMOVED FROM THE SITE.
3. THE PROJECT SITE SHALL BE CLEANED OF ALL CONSTRUCTION DEBRIS AND MATERIALS REMOVED FROM THE SITE SHALL BE TRANSPORTED TO AN APPROPRIATE FACILITY OR OTHERWISE DISPOSED OF PROPERLY. NO DEBRIS SHALL BE BURIED ON THE SITE.

TEMPORARY BASIN NOTES:

1. AS FILLING/GRADING ADVANCES ACROSS THE SITE, TEMPORARY LOW AREAS/SEDIMENT TRAPS MUST BE CREATED TO CAPTURE STORMWATER RUNOFF AND CONTAIN IT ONSITE. PROVIDE 3600 CUBIC FEET OF STORAGE PER ACRE OF DISTURBED AND NON-STABILIZED SURFACE PER THE MASSACHUSETTS EROSION AND SEDIMENT CONTROL GUIDELINES.

EROSION CONTROL NOTES

1. AS THIS PROJECT SHALL ALTER OVER ONE ACRE OF LAND, IT WILL REQUIRE FILING A NOTICE OF INTENT WITH THE EPA UNDER THE NPDES PHASE II PROGRAM AND WILL REQUIRE A STORMWATER POLLUTION PREVENTION PLAN (SWPP) TO BE FILED PRIOR TO ANY LAND DISTURBANCE. THE SWPP SHALL BE PROVIDED TO THE SITE CONTRACTOR PRIOR TO CONSTRUCTION AND SHALL BE ACCESSIBLE ON SITE DURING ALL CONSTRUCTION ACTIVITY.
2. THE CONTRACTOR SHALL REVIEW AND COMPLY WITH ALL REQUIREMENTS OF THE PROJECT "ORDER OF CONDITIONS" AS ISSUED BY THE TOWN OF LEICESTER CONSERVATION COMMISSION. THE CONTRACTOR AND ALL SUB-CONTRACTORS ARE TO BE MADE AWARE OF THE ORDER OF CONDITIONS AS GRANTED BY THE LEICESTER CONSERVATION COMMISSION AND ITS REGULATIONS APPLICABLE: TO THIS PROJECT. A COPY OF THIS ORDER IS TO BE READILY AVAILABLE ON SITE AT ALL TIMES.
3. THE SEDIMENTATION AND EROSION CONTROLS DEPICTED HEREON ARE THE MINIMUM REQUIRED. THE CONTRACTOR IS RESPONSIBLE FOR THE PROPER MAINTENANCE OF ALL EROSION CONTROLS AND SHALL INSTALL ADDITIONAL MITIGATION MEASURES AS MAY BE NECESSARY TO ENSURE PROTECTION OF ALL NATURAL RESOURCES.
4. PRIOR TO THE START OF ANY CONSTRUCTION, ALL SEDIMENTATION AND EROSION CONTROL MEASURES SHALL BE INSTALLED AS DEPICTED HEREON. THE CONTRACTOR SHALL MAINTAIN THESE MEASURES UNTIL ALL WORK IS COMPLETED AND ALL AREAS HAVE BEEN STABILIZED.
5. AT NO TIME SHOULD HEAVY EQUIPMENT CROSS THE EROSION CONTROL BARRIERS OR OPERATE BEYOND THE LIMIT OF WORK DEPICTED HEREON. ALL FUELING OF CONSTRUCTION EQUIPMENT IS TO BE DONE IN THE UPLANDS OUTSIDE OF THE 100' BUFFER ZONE.
6. TEMPORARY STABILIZATION OF DISTURBED AREAS IS TO LIMIT EROSION TOWARD THE WETLAND AREAS. ALL TRENCHES ARE TO BE FILLED ON A DAILY BASIS WITH SPECIAL CARE TAKEN TO AVOID ROUTING RAINFALL THROUGH GULLIES TOWARD THE WETLAND AREAS. TEMPORARY DETENTION BASINS ARE TO BE INSTALLED IN AREAS PRONE TO CHANNEL FLOWS DURING PERIODS OF HIGH INTENSITY RAINFALL.
7. THE CONTRACTOR IS TO USE PROPER JUDGMENT RELATIVE TO CONSTRUCTION PRACTICES DURING ADVERSE WEATHER CONDITIONS OR PERIODS OF HIGH GROUNDWATER. NO WORK IS TO BE PERFORMED NEAR THE WETLAND AREAS DURING PERIODS OF HEAVY RAINFALL.
8. PERIODIC MAINTENANCE OF THE EROSION CONTROL MEASURES IS REQUIRED IN ORDER TO INSURE THE PROPER PROTECTION OF THE RESOURCE: AREAS. ALL EROSION CONTROL STRUCTURES ARE TO BE INSPECTED ON A WEEKLY BASIS OR WHENEVER THERE IS A STORM EVENT EXCEEDING ½"OF RAIN IN TWENTY FOUR HOURS.
9. THE TREE CLEARING REMOVAL LIMITS SHALL NOT EXTEND BEYOND THE SILTFENCE/HAYBALE EROSION CONTROL BARRIERS AND THE LIMIT OF WORK. AREAS OF EXISTING VEGETATION TO REMAIN ARE TO BE PROTECTED THROUGHOUT CONSTRUCTION.
10. THE BASE OF ALL STOCKPILES SHALL BE CONTAINED WITHIN THE EROSION CONTROL MEASURES LIMITS. STOCKPILES TO BE LEFT OVER 30 DAYS SHALL BE SEEDED WITH ANNUAL RYE GRASS.
11. THE FUNCTIONING OF THE TEMPORARY SEDIMENT CONTROLS OR CONSTRUCTION OPERATIONS SHALL NOT CAUSE NOTICEABLE SEDIMENT PLUMES. IF PLUMES OCCUR, THE CONTRACTOR SHALL STOP WORK AND INSTALL ADDITIONAL SEDIMENTATION CONTROLS IMMEDIATELY TO PREVENT FURTHER SEDIMENTATION.
12. THE CONTRACTOR SHALL REMOVE AND DISPOSE OF ALL ACCUMULATED SEDIMENT AS REQUIRED BY THE CONSERVATION COMMISSION OR AS DIRECTED BY THE ENGINEER.
13. AFTER THE CONSTRUCTION/INSTALLATION OF THE PERMANENT DRAINAGE /INFRASTRUCTURE, THE CONTRACTOR SHALL INSTALL AND MAINTAIN THE APPROPRIATE SEDIMENTATION CONTROLS TO PROTECT THE INTEGRITY OF THE STRUCTURES DURING THE ONGOING CONSTRUCT/ON. ALL CATCH BASINS SHALL HAVE A SILT SACK CATCH BASIN FILTER INSTALLED. THE FILTERS SHALL BE MAINTAINED AND/OR REPLACED AS NECESSARY UNTIL THE CONSTRUCTION IS COMPLETED.
14. ALL DISTURBED NON-PAVED AREAS WITHIN THE PROJECT LIMIT OF WORK SHALL BE DRESSED WITH A MINIMUM OF FOUR INCHES (4") OF SCREENED LOAM AND SHALL BE SEEDED WITH AN APPROVED GRASS MIX AND MULCHED AS SOON AS POSSIBLE IN ORDER TO INSURE THE RAPID STABILIZATION OF THE EROSION PRONE AREAS. A CONSERVATION SEED MIXTURE OF 20% ANNUAL RYEGRASS, 30% CREEPING RED FESCUE, 30% CHEWINGS FESCUE AND 20% PERENNIAL RYEGRASS IS RECOMMENDED. IF PERMANENT SEEDING CANNOT BE INSTALLED IMMEDIATELY AFTER FINAL GRADING, THE AREAS ARE TO BE TEMPORARILY MULCHED TO STABILIZE ALL SLOPES UPON COMPLETION OF WORK TO PREVENT EROSION OF SOILS INTO THE RESOURCE AREAS AND THEIR ASSOCIATED BUFFER ZONES. DURING THE GROW-IN PERIOD, TEMPORARY EROSION CONTROLS (I.E. BARK MULCH OR STRAW) IS TO BE USED TO PREVENT EROSION DURING PERIODS OF RAINFALL OR SNOW MELT. WHERE PRACTICAL DURING CONSTRUCTION, DISTURBED AREAS SHALL BE STABILIZED BY TEMPORARILY SEEDING OR MULCHING.
15. ALL DISTURBED AREAS TO BE LEFT DORMANT FOR MORE THAN 60 DAYS SHALL BE STABILIZED BY TEMPORARILY SEEDING OR MULCHING.
16. DEWATERING OPERATIONS, IF REQUIRED SHALL DISCHARGE ONTO STABILIZED AREAS AND ALL DISCHARGE WATER IS TO PASS THROUGH SEDIMENTATION CONTROL DEVICES TO PREVENT IMPACTS UPON THE WETLANDS RESOURCES, DRAINAGE SYSTEMS. AND ABUTTING PROPERTIES.
17. ALL TEMPORARY SEDIMENTATION AND EROSION CONTROL MEASURES SHALL BE REMOVED IN THEIR ENTIRETY AFTER FINAL SITE STABILIZATION AND ISSUANCE OF THE FINAL CERTIFICATE OF COMPLIANCE BY THE CONSERVATION COMMISSION.
18. THE APPLICANT SHALL NOTIFY THE LEICESTER CONSERVATION COMMISSION ONCE THE JURISDICTIONAL WORK HAS BEEN COMPLETED AND ENTIRE SITE HAS BEEN PROPERLY STABILIZED. UPON APPROVAL OF THE WORK SUBJECT TO THE ORDER OF CONDITIONS. THE APPLICANT IS TO RECEIVE A CERTIFICATE OF COMPLIANCE: THAT IS TO BE RECORDED AT THE WORCESTER REGISTRY OF DEEDS.
19. CONTRACTOR SHALL APPLY STABILIZATION FABRIC TO ALL SLOPES 3H:1V OR STEEPER. CONTRACTOR SHALL GRASS DISTURBED AREAS IN ACCORDANCE WITH COUNTY SPECIFICATIONS UNTIL A HEALTHY STAND OF GRASS IS OBTAINED.

GENERAL NOTES:

1. THE CONTRACTOR IS SPECIFICALLY CAUTIONED THAT THE LOCATION AND/OR ELEVATION OF EXISTING UTILITIES AND STRUCTURES AS SHOWN ON THESE PLANS IS BASED ON RECORDS OF VARIOUS UTILITY COMPANIES AND WHERE POSSIBLE, MEASUREMENTS TAKEN IN THE FIELD. THIS INFORMATION IS NOT TO BE RELIED ON AS BEING EXACT OR COMPLETE. THE LOCATION OF ALL UNDERGROUND UTILITIES AND STRUCTURES SHALL BE VERIFIED IN THE FIELD BY THE CONTRACTOR PRIOR TO THE START OF CONSTRUCTION. THE CONTRACTOR MUST CONTACT THE APPROPRIATE UTILITY COMPANY, ANY GOVERNING PERMITTING AUTHORITY, AND "DIGSAFE" AT LEAST 72 HOURS PRIOR TO ANY EXCAVATION WORK TO REQUEST EXACT FIELD LOCATION OF UTILITIES.
2. GRADING / DEMOLITION OUTSIDE OF THE PROJECT BOUNDARIES (IF ANY) REQUIRES A TEMPORARY CONSTRUCTION/GRADING EASEMENT FROM THE LANDOWNER (BY OTHERS).
3. ALTHOUGH CERTAIN ITEMS HAVE BEEN NOTED ON THIS DRAWING FOR DEMOLITION, NO ATTEMPT HAS BEEN MADE TO DELINEATE EACH AND EVERY ITEM THAT REQUIRES DEMOLITION FOR THE COMPLETION OF THE PROJECT. THE CONTRACTOR WILL BE RESPONSIBLE FOR ALL NECESSARY DEMOLITION WORK TO COMPLETE THE PROJECT. ALLEN & MAJOR ASSOCIATES, INC. IS NOT RESPONSIBLE FOR SITE DEMOLITION ITEMS NOT SHOWN ON THE SURVEY, OR SPECIFICALLY NOTED. THE DEMOLITION NOTES AND ARROWS ON THIS PLAN ARE TYPICAL AND DO NOT REFLECT QUANTITY.
4. WRITTEN DIMENSIONS ON THIS PLAN TAKE PRECEDENCE OVER SCALED DIMENSIONS. THE CONTRACTOR SHALL USE CAUTION WHEN SCALING REPRODUCED PLANS. IN THE EVENT OF A CONFLICT BETWEEN THIS PLAN SET AND ANY OTHER DRAWINGS AND/OR SPECIFICATIONS OR CONDITIONS, THE ENGINEER SHALL BE NOTIFIED BY THE CONTRACTOR.
5. THE INFORMATION SHOWN ON THIS PLAN IS THE SOLE PROPERTY OF ALLEN & MAJOR ASSOCIATES, INC. ITS INTENDED USE IS TO PROVIDE INFORMATION. ANY ALTERATION, MISUSE, OR RECALCULATION OF INFORMATION OR DATA WITHOUT THE EXPRESSED, WRITTEN CONSENT OF ALLEN & MAJOR ASSOCIATES, INC. IS STRICTLY PROHIBITED.

GRAPHIC SCALE

80 0 40 80 160 320

(IN FEET)
1 inch = 80 ft.

APPROVAL UNDER SITE PLAN APPROVAL REQUIRED. SUBJECT TO A COVENANT TO BE RECORDED HEREWITH.

DATE: _____

LEICESTER PLANNING BOARD

I CERTIFY THAT NO NOTICE OF APPEAL WAS RECEIVED DURING THE TWENTY (20) RECORDING DAYS NEXT AFTER RECEIPT AND OF NOTICE FROM THE PLANNING BOARD OF THE APPROVAL OF THIS PLAN

TOWN CLERK _____ TOWN OF LEICESTER

COMMONWEALTH OF MASSACHUSETTS
MICHAEL A. MALYNOWSKI
CIVIL
No. 47269
REGISTERED PROFESSIONAL ENGINEER

Digitally signed by Michael Malynowski
Date: 2022.02.06 21:17:29 -05'00'

PROFESSIONAL ENGINEER FOR ALLEN & MAJOR ASSOCIATES, INC.

REV	DATE	DESCRIPTION
4	02-07-22	MISC. REVISIONS PER TOWN COMMENTS
3	12-14-21	MISC. REVISIONS PER TOWN COMMENTS
2	11-10-21	MISC. REVISIONS PER TOWN COMMENTS
1	10-05-21	MISC. REVISIONS PER TOWN COMMENTS

APPLICANT:

MKEP 770 LLC
265 SUNRISE HIGHWAY, SUITE 1368
ROCKVILLE CENTER, NY 11570

PROJECT:

SKYVIEW ESTATES
RESIDENTIAL DEVELOPMENT
MAIN STREET
LEICESTER, MA

PROJECT NO.	2889-01	DATE:	09-17-21
SCALE:	1" = 80'	DWG. :	C-2889-01_Site-Prep
DESIGNED BY:	SM	CHECKED BY:	MAM

PREPARED BY:

ALLEN & MAJOR ASSOCIATES, INC.
civil engineering ♦ land surveying
environmental consulting ♦ landscape architecture
www.allenmajor.com
100 COMMERCE WAY, SUITE 5
WOBURN MA 01801
TEL: (781) 935-6889
FAX: (781) 935-2896
WOBURN, MA ♦ LAKEVILLE, MA ♦ MANCHESTER, NH

THIS DRAWING HAS BEEN PREPARED IN DIGITAL FORMAT. CLIENT/CLIENT'S REPRESENTATIVE OR CONSULTANTS MAY BE PROVIDED COPIES OF DRAWINGS AND SPECIFICATIONS FOR HIS/HER INFORMATION AND/OR SPECIFIC USE ON THIS PROJECT. DUE TO THE POTENTIAL THAT THE PROVIDED INFORMATION MAY BE MODIFIED UNINTENTIONALLY OR OTHERWISE, ALLEN & MAJOR ASSOCIATES, INC. MAY REMOVE ALL INDICATION OF THE DOCUMENT'S AUTHORSHIP ON THE DIGITAL MEDIA. PRINTED REPRESENTATIONS OR PORTABLE DOCUMENT FORMAT OF THE DRAWINGS AND SPECIFICATIONS ISSUED SHALL BE THE ONLY RECORD COPIES OF ALLEN & MAJOR ASSOCIATES, INC.'S WORK PRODUCT.

DRAWING TITLE:

PHASE 1B
SITE PREPARATION PLAN

Copyright © 2022 Allen & Major Associates, Inc.
All Rights Reserved

SHEET No.

C-100A

GENERAL CONSTRUCTION SEQUENCE

ADVANCEMENT OF ROADWAY CONSTRUCTION AND ASSOCIATED INFRASTRUCTURE SHALL FOLLOW THE GENERAL SEQUENCE NOTED BELOW.

PHASE 1A – SKYVIEW DRIVE STA. 0+00 TO 11+50

1. THE LIMITS OF CLEARING SHALL BE STAKED OUT PRIOR TO ANY CONSTRUCTION.
2. INSTALL EROSION CONTROL BARRIERS AS DEPICTED HEREON.
3. INSTALL STONE CONSTRUCTION ENTRANCE PER DETAILS AT ANTICIPATED CONSTRUCTION ENTRANCES.
4. THE CONTRACTOR SHALL COORDINATE A SITE MEETING WITH THE TOWN LEICESTER PLANNING BOARD AGENT (QUINN ENGINEERING, INC.), CONSERVATION COMMISSION REPRESENTATIVE, HIGHWAY DEPARTMENT, AND ALLEN & MAJOR ASSOCIATES, INC. FOR REVIEW AND APPROVAL OF THE EROSION CONTROLS AND LIMIT OF WORK FOR THE PROJECT PRIOR TO ANY TREE CLEARING AND CONSTRUCTION ACTIVITIES.
5. CUT TREES AND REMOVE STUMPS PER THE STUMP REMOVAL NOTES SHOWN HEREON. CLEAR THE AREAS FOR THE TEMPORARY SEDIMENT BASINS AND TEMPORARY SWALES
6. CONSTRUCT TEMPORARY STORMWATER DIVERSION BERM AND TEMPORARY SEDIMENT BASIN FOR THE PROJECT.
7. COMPLETE CLEARING OPERATIONS WITHIN ROADWAY LIMITS OF WORK FOR PROJECT.
8. STRIP AND STOCKPILE TOPSOIL FOR WITHIN ROADWAY AND DRAINAGE BASIN AREAS. STABILIZE TOPSOIL NOT SUBJECT TO IMMEDIATE USE WITH A TEMPORARY SEEDING MIXTURE. ALL STOCKPILES SHALL BE RINGED WITH SILT FENCE.
9. MASS GRADING – PERFORM EARTHWORK CUT TO FILLS FOR ROADWAY AND DRAINAGE BASINS AS DEPICTED HEREON. STABILIZE DISTURBED AREAS BY HAY AND SEED IN ACCORDANCE WITH THE ORDER OF CONDITIONS AND PROJECT PLANS.
10. INSTALL INFRASTRUCTURE IMPROVEMENTS FOR THE PROJECT (INCLUDING ROADWAY GRADING, STORM WATER PIPING AND BASINS, ETC.) AS DEPICTED HEREON.

PHASE 1B – SKYVIEW DRIVE STA. 11+50 TO 24+00 & SKYVIEW TERRACE

1. THE LIMITS OF CLEARING SHALL BE STAKED OUT PRIOR TO ANY CONSTRUCTION.
2. INSTALL EROSION CONTROL BARRIERS AS DEPICTED HEREON.
3. INSTALL EROSION CONTROL MEASURES WITHIN NEWLY CONSTRUCTED ROADWAY STRUCTURES
4. INSTALL STONE CONSTRUCTION ENTRANCE PER DETAILS AT ANTICIPATED CONSTRUCTION ENTRANCES.
5. CUT TREES AND REMOVE STUMPS PER THE STUMP REMOVAL NOTES SHOWN HEREON. CLEAR THE AREAS FOR THE TEMPORARY SEDIMENT BASINS AND TEMPORARY SWALES
6. CONSTRUCT TEMPORARY STORMWATER DIVERSION BERM AND TEMPORARY SEDIMENT BASIN FOR THE PROJECT.
7. COMPLETE CLEARING OPERATIONS WITHIN ROADWAY LIMITS OF WORK FOR PROJECT.
8. STRIP AND STOCKPILE TOPSOIL FOR WITHIN ROADWAY AND DRAINAGE BASIN AREAS. STABILIZE TOPSOIL NOT SUBJECT TO IMMEDIATE USE WITH A TEMPORARY SEEDING MIXTURE. ALL STOCKPILES SHALL BE RINGED WITH SILT FENCE.
9. MASS GRADING – PERFORM EARTHWORK CUT TO FILLS FOR ROADWAY AND DRAINAGE BASINS AS DEPICTED HEREON. STABILIZE DISTURBED AREAS BY HAY AND SEED IN ACCORDANCE WITH THE ORDER OF CONDITIONS AND PROJECT PLANS.
10. INSTALL INFRASTRUCTURE IMPROVEMENTS FOR THE PROJECT (INCLUDING ROADWAY GRADING, STORM WATER PIPING AND BASINS, ETC.) AS DEPICTED HEREON.

PHASE 1C – SKYVIEW DRIVE STA. 24+00 TO 25+50 & EMERGENCY ACCESS

1. THE LIMITS OF CLEARING SHALL BE STAKED OUT PRIOR TO ANY CONSTRUCTION.
2. INSTALL EROSION CONTROL BARRIERS AS DEPICTED HEREON.
3. INSTALL EROSION CONTROL MEASURES WITHIN NEWLY CONSTRUCTED ROADWAY STRUCTURES
4. INSTALL STONE CONSTRUCTION ENTRANCE PER DETAILS AT ANTICIPATED CONSTRUCTION ENTRANCES.
5. CUT TREES AND REMOVE STUMPS PER THE STUMP REMOVAL NOTES SHOWN HEREON. CLEAR THE AREAS FOR THE TEMPORARY SEDIMENT BASINS AND TEMPORARY SWALES
6. CONSTRUCT TEMPORARY STORMWATER DIVERSION BERM AND TEMPORARY SEDIMENT BASIN FOR THE PROJECT.
7. COMPLETE CLEARING OPERATIONS WITHIN ROADWAY LIMITS OF WORK FOR PROJECT.
8. STRIP AND STOCKPILE TOPSOIL FOR WITHIN ROADWAY AND DRAINAGE BASIN AREAS. STABILIZE TOPSOIL NOT SUBJECT TO IMMEDIATE USE WITH A TEMPORARY SEEDING MIXTURE. ALL STOCKPILES SHALL BE RINGED WITH SILT FENCE.
9. MASS GRADING – PERFORM EARTHWORK CUT TO FILLS FOR ROADWAY AND DRAINAGE BASINS AS DEPICTED HEREON. STABILIZE DISTURBED AREAS BY HAY AND SEED IN ACCORDANCE WITH THE ORDER OF CONDITIONS AND PROJECT PLANS.
10. INSTALL INFRASTRUCTURE IMPROVEMENTS FOR THE PROJECT (INCLUDING ROADWAY GRADING, STORM WATER PIPING AND BASINS, ETC.) AS DEPICTED HEREON.

PHASE 2 – LOT DEVELOPMENT AND HOME-BUILDING

1. INSTALL EROSION CONTROL BARRIERS AS DEPICTED HEREON.
2. INSTALL EROSION CONTROL MEASURES WITHIN NEWLY CONSTRUCTED ROADWAY STRUCTURES
3. CUT TREES AND REMOVE STUMPS PER THE STUMP REMOVAL NOTES SHOWN HEREON.
4. CONSTRUCT TEMPORARY STORMWATER DIVERSION BERM AND TEMPORARY SEDIMENT BASIN FOR THE PROJECT.
5. CONSTRUCT BUILDING FOUNDATIONS
6. STABILIZE DISTURBED AREAS

LEGEND

- LIMIT OF DISTURBANCE
- LIMIT OF 'CLEAR AND GRUB'
- TEMPORARY FENCE
- TUBULAR BARRIER
- CATCH BASIN FILTER
- STABILIZED ENTRANCE
- STOCKPILE/STAGING AREA

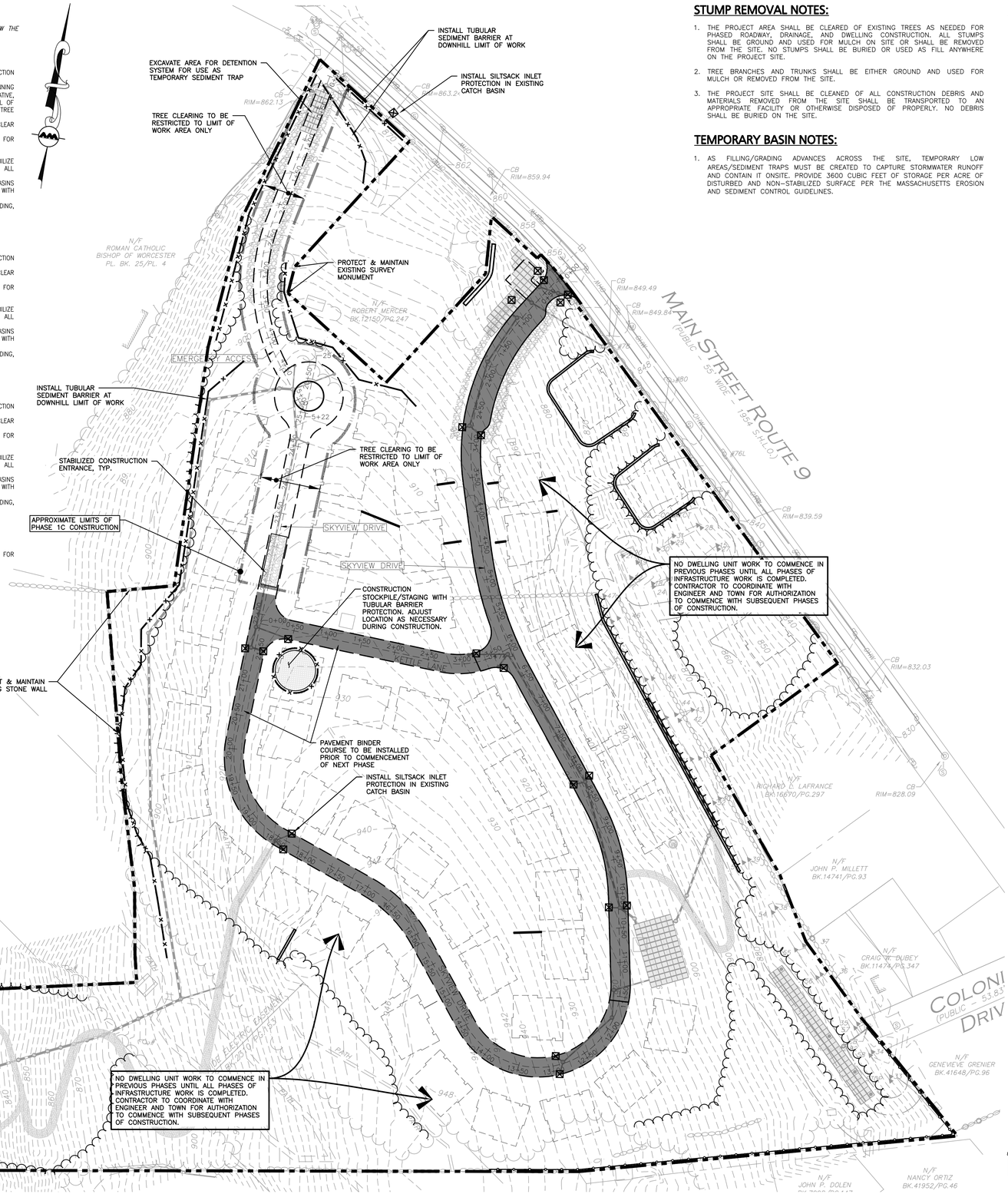

DIG SAFE

BEFORE YOU DIG CALL 811 OR 1-888-DIG-SAFE 1-888-344-7233

R:\PROJECTS\2889-01\CIVIL\DRAWINGS\CURRENT\C-2889-01_SITE-PREP.DWG

STUMP REMOVAL NOTES:

1. THE PROJECT AREA SHALL BE CLEARED OF EXISTING TREES AS NEEDED FOR PHASED ROADWAY, DRAINAGE, AND DWELLING CONSTRUCTION. ALL STUMPS SHALL BE GROUND AND USED FOR MULCH ON SITE OR SHALL BE REMOVED FROM THE SITE. NO STUMPS SHALL BE BURIED OR USED AS FILL ANYWHERE ON THE PROJECT SITE.
2. TREE BRANCHES AND TRUNKS SHALL BE EITHER GROUND AND USED FOR MULCH OR REMOVED FROM THE SITE.
3. THE PROJECT SITE SHALL BE CLEANED OF ALL CONSTRUCTION DEBRIS AND MATERIALS REMOVED FROM THE SITE SHALL BE TRANSPORTED TO AN APPROPRIATE FACILITY OR OTHERWISE DISPOSED OF PROPERLY. NO DEBRIS SHALL BE BURIED ON THE SITE.

TEMPORARY BASIN NOTES:

1. AS FILLING/GRADING ADVANCES ACROSS THE SITE, TEMPORARY LOW AREAS/SEDIMENT TRAPS MUST BE CREATED TO CAPTURE STORMWATER RUNOFF AND CONTAIN IT ONSITE. PROVIDE 3600 CUBIC FEET OF STORAGE PER ACRE OF DISTURBED AND NON-STABILIZED SURFACE PER THE MASSACHUSETTS EROSION AND SEDIMENT CONTROL GUIDELINES.

EROSION CONTROL NOTES

1. AS THIS PROJECT SHALL ALTER OVER ONE ACRE OF LAND, IT WILL REQUIRE FILING A NOTICE OF INTENT WITH THE EPA UNDER THE NPDES PHASE II PROGRAM AND WILL REQUIRE A STORMWATER POLLUTION PREVENTION PLAN (SWPP) TO BE FILED PRIOR TO ANY LAND DISTURBANCE. THE SWPP SHALL BE PROVIDED TO THE SITE CONTRACTOR PRIOR TO CONSTRUCTION AND SHALL BE ACCESSIBLE ON SITE DURING ALL CONSTRUCTION ACTIVITY.
2. THE CONTRACTOR SHALL REVIEW AND COMPLY WITH ALL REQUIREMENTS OF THE PROJECT "ORDER OF CONDITIONS" AS ISSUED BY THE TOWN OF LEICESTER CONSERVATION COMMISSION. THE CONTRACTOR AND ALL SUB-CONTRACTORS ARE TO BE MADE AWARE OF THE ORDER OF CONDITIONS AS GRANTED BY THE LEICESTER CONSERVATION COMMISSION AND ITS REGULATIONS APPLICABLE: TO THIS PROJECT. A COPY OF THIS ORDER IS TO BE READILY AVAILABLE ON SITE AT ALL TIMES.
3. THE SEDIMENTATION AND EROSION CONTROLS DEPICTED HEREON ARE THE MINIMUM REQUIRED. THE CONTRACTOR IS RESPONSIBLE FOR THE PROPER MAINTENANCE OF ALL EROSION CONTROLS AND SHALL INSTALL ADDITIONAL MITIGATION MEASURES AS MAY BE NECESSARY TO ENSURE PROTECTION OF ALL NATURAL RESOURCES.
4. PRIOR TO THE START OF ANY CONSTRUCTION, ALL SEDIMENTATION AND EROSION CONTROL MEASURES SHALL BE INSTALLED AS DEPICTED HEREON. THE CONTRACTOR SHALL MAINTAIN THESE MEASURES UNTIL ALL WORK IS COMPLETED AND ALL AREAS HAVE BEEN STABILIZED.
5. AT NO TIME SHOULD HEAVY EQUIPMENT CROSS THE EROSION CONTROL BARRIERS OR OPERATE BEYOND THE LIMIT OF WORK DEPICTED HEREON. ALL FUELING OF CONSTRUCTION EQUIPMENT IS TO BE DONE IN THE UPLANDS OUTSIDE OF THE 100' BUFFER ZONE.
6. TEMPORARY STABILIZATION OF DISTURBED AREAS IS TO LIMIT EROSION TOWARD THE WETLAND AREAS. ALL TRENCHES ARE TO BE FILLED ON A DAILY BASIS WITH SPECIAL CARE TAKEN TO AVOID ROUTING RAINFALL THROUGH GULLIES TOWARD THE WETLAND AREAS. TEMPORARY DETENTION BASINS ARE TO BE INSTALLED IN AREAS PRONE TO CHANNEL FLOWS DURING PERIODS OF HIGH INTENSITY RAINFALL.
7. THE CONTRACTOR IS TO USE PROPER JUDGMENT RELATIVE TO CONSTRUCTION PRACTICES DURING ADVERSE WEATHER CONDITIONS OR PERIODS OF HIGH GROUNDWATER. NO WORK IS TO BE PERFORMED NEAR THE WETLAND AREAS DURING PERIODS OF HEAVY RAINFALL.
8. PERIODIC MAINTENANCE OF THE EROSION CONTROL MEASURES IS REQUIRED IN ORDER TO INSURE THE PROPER PROTECTION OF THE RESOURCE: AREAS. ALL EROSION CONTROL STRUCTURES ARE TO BE INSPECTED ON A WEEKLY BASIS OR WHENEVER THERE IS A STORM EVENT EXCEEDING ½"OF RAIN IN TWENTY FOUR HOURS.
9. THE TREE CLEARING REMOVAL LIMITS SHALL NOT EXTEND BEYOND THE SILTFENCE/HAYBALE EROSION CONTROL BARRIERS AND THE LIMIT OF WORK. AREAS OF EXISTING VEGETATION TO REMAIN ARE TO BE PROTECTED THROUGHOUT CONSTRUCTION.
10. THE BASE OF ALL STOCKPILES SHALL BE CONTAINED WITHIN THE EROSION CONTROL MEASURES LIMITS. STOCKPILES TO BE LEFT OVER 30 DAYS SHALL BE SEEDED WITH ANNUAL RYE GRASS.
11. THE FUNCTIONING OF THE TEMPORARY SEDIMENT CONTROLS OR CONSTRUCTION OPERATIONS SHALL NOT CAUSE NOTICEABLE SEDIMENT PLUMES. IF PLUMES OCCUR, THE CONTRACTOR SHALL STOP WORK AND INSTALL ADDITIONAL SEDIMENTATION CONTROLS IMMEDIATELY TO PREVENT FURTHER SEDIMENTATION.
12. THE CONTRACTOR SHALL REMOVE AND DISPOSE OF ALL ACCUMULATED SEDIMENT AS REQUIRED BY THE CONSERVATION COMMISSION OR AS DIRECTED BY THE ENGINEER.
13. AFTER THE CONSTRUCTION/INSTALLATION OF THE PERMANENT DRAINAGE /INFRASTRUCTURE, THE CONTRACTOR SHALL INSTALL AND MAINTAIN THE APPROPRIATE SEDIMENTATION CONTROLS TO PROTECT THE INTEGRITY OF THE STRUCTURES DURING THE ONGOING CONSTRUCT/ON. ALL CATCH BASINS SHALL HAVE A SILT SACK CATCH BASIN FILTER INSTALLED. THE FILTERS SHALL BE MAINTAINED AND/OR REPLACED AS NECESSARY UNTIL THE CONSTRUCTION IS COMPLETED.
14. ALL DISTURBED NON-PAVED AREAS WITHIN THE PROJECT LIMIT OF WORK SHALL BE DRESSED WITH A MINIMUM OF FOUR INCHES (4") OF SCREENED LOAM AND SHALL BE SEEDED WITH AN APPROVED GRASS MIX AND MULCHED AS SOON AS POSSIBLE IN ORDER TO INSURE THE RAPID STABILIZATION OF THE EROSION PRONE AREAS. A CONSERVATION SEED MIXTURE OF 20% ANNUAL RYEGRASS, 30% CREEPING RED FESCUE, 30% CHEWINGS FESCUE AND 20% PERENNIAL RYEGRASS IS RECOMMENDED. IF PERMANENT SEEDING CANNOT BE INSTALLED IMMEDIATELY AFTER FINAL GRADING, THE AREAS ARE TO BE TEMPORARILY MULCHED TO STABILIZE ALL SLOPES UPON COMPLETION OF WORK TO PREVENT EROSION OF SOILS INTO THE RESOURCE AREAS AND THEIR ASSOCIATED BUFFER ZONES. DURING THE GROW-IN PERIOD, TEMPORARY EROSION CONTROLS (I.E. BARK MULCH OR STRAW) IS TO BE USED TO PREVENT EROSION DURING PERIODS OF RAINFALL OR SNOW MELT. WHERE PRACTICAL DURING CONSTRUCTION, DISTURBED AREAS SHALL BE STABILIZED BY TEMPORARILY SEEDING OR MULCHING.
15. ALL DISTURBED AREAS TO BE LEFT DORMANT FOR MORE THAN 60 DAYS SHALL BE STABILIZED BY TEMPORARILY SEEDING OR MULCHING.
16. DEWATERING OPERATIONS, IF REQUIRED SHALL DISCHARGE ONTO STABILIZED AREAS AND ALL DISCHARGE WATER IS TO PASS THROUGH SEDIMENTATION CONTROL DEVICES TO PREVENT IMPACTS UPON THE WETLANDS RESOURCES, DRAINAGE SYSTEMS. AND ABUTTING PROPERTIES.
17. ALL TEMPORARY SEDIMENTATION AND EROSION CONTROL MEASURES SHALL BE REMOVED IN THEIR ENTIRETY AFTER FINAL SITE STABILIZATION AND ISSUANCE OF THE FINAL CERTIFICATE OF COMPLIANCE BY THE CONSERVATION COMMISSION.
18. THE APPLICANT SHALL NOTIFY THE LEICESTER CONSERVATION COMMISSION ONCE THE JURISDICTIONAL WORK HAS BEEN COMPLETED AND ENTIRE SITE HAS BEEN PROPERLY STABILIZED. UPON APPROVAL OF THE WORK SUBJECT TO THE ORDER OF CONDITIONS. THE APPLICANT IS TO RECEIVE A CERTIFICATE OF COMPLIANCE: THAT IS TO BE RECORDED AT THE WORCESTER REGISTRY OF DEEDS.
19. CONTRACTOR SHALL APPLY STABILIZATION FABRIC TO ALL SLOPES 3H:1V OR STEEPER. CONTRACTOR SHALL GRASS DISTURBED AREAS IN ACCORDANCE WITH COUNTY SPECIFICATIONS UNTIL A HEALTHY STAND OF GRASS IS OBTAINED.

GENERAL NOTES:

1. THE CONTRACTOR IS SPECIFICALLY CAUTIONED THAT THE LOCATION AND/OR ELEVATION OF EXISTING UTILITIES AND STRUCTURES AS SHOWN ON THESE PLANS IS BASED ON RECORDS OF VARIOUS UTILITY COMPANIES AND WHERE POSSIBLE, MEASUREMENTS TAKEN IN THE FIELD. THIS INFORMATION IS NOT TO BE RELIED ON AS BEING EXACT OR COMPLETE. THE LOCATION OF ALL UNDERGROUND UTILITIES AND STRUCTURES SHALL BE VERIFIED IN THE FIELD BY THE CONTRACTOR PRIOR TO THE START OF CONSTRUCTION. THE CONTRACTOR MUST CONTACT THE APPROPRIATE UTILITY COMPANY, ANY GOVERNING PERMITTING AUTHORITY, AND "DIGSAFE" AT LEAST 72 HOURS PRIOR TO ANY EXCAVATION WORK TO REQUEST EXACT FIELD LOCATION OF UTILITIES.
2. GRADING / DEMOLITION OUTSIDE OF THE PROJECT BOUNDARIES (IF ANY) REQUIRES A TEMPORARY CONSTRUCTION/GRADING EASEMENT FROM THE LANDOWNER (BY OTHERS).
3. ALTHOUGH CERTAIN ITEMS HAVE BEEN NOTED ON THIS DRAWING FOR DEMOLITION, NO ATTEMPT HAS BEEN MADE TO DELINEATE EACH AND EVERY ITEM THAT REQUIRES DEMOLITION FOR THE COMPLETION OF THE PROJECT. THE CONTRACTOR WILL BE RESPONSIBLE FOR ALL NECESSARY DEMOLITION WORK TO COMPLETE THE PROJECT. ALLEN & MAJOR ASSOCIATES, INC. IS NOT RESPONSIBLE FOR SITE DEMOLITION ITEMS NOT SHOWN ON THE SURVEY, OR SPECIFICALLY NOTED. THE DEMOLITION NOTES AND ARROWS ON THIS PLAN ARE TYPICAL AND DO NOT REFLECT QUANTITY.
4. WRITTEN DIMENSIONS ON THIS PLAN TAKE PRECEDENCE OVER SCALED DIMENSIONS. THE CONTRACTOR SHALL USE CAUTION WHEN SCALING REPRODUCED PLANS. IN THE EVENT OF A CONFLICT BETWEEN THIS PLAN SET AND ANY OTHER DRAWINGS AND/OR SPECIFICATIONS OR CONDITIONS, THE ENGINEER SHALL BE NOTIFIED BY THE CONTRACTOR.
5. THE INFORMATION SHOWN ON THIS PLAN IS THE SOLE PROPERTY OF ALLEN & MAJOR ASSOCIATES, INC. ITS INTENDED USE IS TO PROVIDE INFORMATION. ANY ALTERATION, MISUSE, OR RECALCULATION OF INFORMATION OR DATA WITHOUT THE EXPRESSED, WRITTEN CONSENT OF ALLEN & MAJOR ASSOCIATES, INC. IS STRICTLY PROHIBITED.

GRAPHIC SCALE

80 0 40 80 160 320

(IN FEET)
1 inch = 80 ft.

APPROVAL UNDER SITE PLAN APPROVAL REQUIRED. SUBJECT TO A COVENANT TO BE RECORDED HEREWITH.

DATE: _____

LEICESTER PLANNING BOARD

I CERTIFY THAT NO NOTICE OF APPEAL WAS RECEIVED DURING THE TWENTY (20) RECORDING DAYS NEXT AFTER RECEIPT AND OF NOTICE FROM THE PLANNING BOARD OF THE APPROVAL OF THIS PLAN

TOWN CLERK, TOWN OF LEICESTER

COMMONWEALTH OF MASSACHUSETTS
MICHAEL A. MALYNOWSKI
CIVIL
No. 47269
REGISTERED PROFESSIONAL ENGINEER

Digitally signed by Michael Malynowski
Date: 2022.02.06 21:17:29 -05'00'

PROFESSIONAL ENGINEER FOR ALLEN & MAJOR ASSOCIATES, INC.

REV	DATE	DESCRIPTION
4	02-07-22	MISC. REVISIONS PER TOWN COMMENTS
3	12-14-21	MISC. REVISIONS PER TOWN COMMENTS
2	11-10-21	MISC. REVISIONS PER TOWN COMMENTS
1	10-05-21	MISC. REVISIONS PER TOWN COMMENTS

APPLICANT:

MKEP 770 LLC
265 SUNRISE HIGHWAY, SUITE 1368
ROCKVILLE CENTER, NY 11570

PROJECT:

SKYVIEW ESTATES
RESIDENTIAL DEVELOPMENT
MAIN STREET
LEICESTER, MA

PROJECT NO.	2889-01	DATE:	09-17-21
SCALE:	1" = 80'	DWG. :	C-2889-01_Site-Prep
DESIGNED BY:	SM	CHECKED BY:	MAM

PREPARED BY:

ALLEN & MAJOR ASSOCIATES, INC.
civil engineering ♦ land surveying
environmental consulting ♦ landscape architecture
www.allenmajor.com
100 COMMERCE WAY, SUITE 5
WOBURN MA 01801
TEL: (781) 935-6889
FAX: (781) 935-2896

WOBURN, MA ♦ LAKEVILLE, MA ♦ MANCHESTER, NH

THIS DRAWING HAS BEEN PREPARED IN DIGITAL FORMAT. CLIENT/CLIENT'S REPRESENTATIVE OR CONSULTANTS MAY BE PROVIDED COPIES OF DRAWINGS AND SPECIFICATIONS FOR HIS/HER INFORMATION AND/OR SPECIFIC USE ON THIS PROJECT. DUE TO THE POTENTIAL THAT THE PROVIDED INFORMATION MAY BE MODIFIED UNINTENTIONALLY OR OTHERWISE, ALLEN & MAJOR ASSOCIATES, INC. MAY REMOVE ALL INDICATION OF THE DOCUMENT'S AUTHORSHIP ON THE DIGITAL MEDIA. PRINTED REPRESENTATIONS OR PORTABLE DOCUMENT FORMAT OF THE DRAWINGS AND SPECIFICATIONS ISSUED SHALL BE THE ONLY RECORD COPIES OF ALLEN & MAJOR ASSOCIATES, INC.'S WORK PRODUCT.

DRAWING TITLE:

PHASE 1C
SITE PREPARATION PLAN

Copyright © 2022 Allen & Major Associates, Inc.
All Rights Reserved

SHEET No.

C-100B

GENERAL CONSTRUCTION SEQUENCE

ADVANCEMENT OF ROADWAY CONSTRUCTION AND ASSOCIATED INFRASTRUCTURE SHALL FOLLOW THE GENERAL SEQUENCE NOTED BELOW.

PHASE 1A – SKYVIEW DRIVE STA. 0+00 TO 11+50

1. THE LIMITS OF CLEARING SHALL BE STAKED OUT PRIOR TO ANY CONSTRUCTION.
2. INSTALL EROSION CONTROL BARRIERS AS DEPICTED HEREON.
3. INSTALL STONE CONSTRUCTION ENTRANCE PER DETAILS AT ANTICIPATED CONSTRUCTION ENTRANCES.
4. THE CONTRACTOR SHALL COORDINATE A SITE MEETING WITH THE TOWN LEICESTER PLANNING BOARD AGENT (QUINN ENGINEERING, INC.), CONSERVATION COMMISSION REPRESENTATIVE, HIGHWAY DEPARTMENT, AND ALLEN & MAJOR ASSOCIATES, INC. FOR REVIEW AND APPROVAL OF THE EROSION CONTROLS AND LIMIT OF WORK FOR THE PROJECT PRIOR TO ANY TREE CLEARING AND CONSTRUCTION ACTIVITIES.
5. CUT TREES AND REMOVE STUMPS PER THE STUMP REMOVAL NOTES SHOWN HEREON. CLEAR THE AREAS FOR THE TEMPORARY SEDIMENT BASINS AND TEMPORARY SWALES
6. CONSTRUCT TEMPORARY STORMWATER DIVERSION BERM AND TEMPORARY SEDIMENT BASIN FOR THE PROJECT.
7. COMPLETE CLEARING OPERATIONS WITHIN ROADWAY LIMITS OF WORK FOR PROJECT.
8. STRIP AND STOCKPILE TOPSOIL FOR WITHIN ROADWAY AND DRAINAGE BASIN AREAS. STABILIZE TOPSOIL NOT SUBJECT TO IMMEDIATE USE WITH A TEMPORARY SEEDING MIXTURE. ALL STOCKPILES SHALL BE RINGED WITH SILT FENCE.
9. MASS GRADING – PERFORM EARTHWORK CUT TO FILLS FOR ROADWAY AND DRAINAGE BASINS AS DEPICTED HEREON. STABILIZE DISTURBED AREAS BY HAY AND SEED IN ACCORDANCE WITH THE ORDER OF CONDITIONS AND PROJECT PLANS.
10. INSTALL INFRASTRUCTURE IMPROVEMENTS FOR THE PROJECT (INCLUDING ROADWAY GRADING, STORM WATER PIPING AND BASINS, ETC.) AS DEPICTED HEREON.

PHASE 1B – SKYVIEW DRIVE STA. 11+50 TO 24+00 & SKYVIEW TERRACE

1. THE LIMITS OF CLEARING SHALL BE STAKED OUT PRIOR TO ANY CONSTRUCTION.
2. INSTALL EROSION CONTROL BARRIERS AS DEPICTED HEREON.
3. INSTALL EROSION CONTROL MEASURES WITHIN NEWLY CONSTRUCTED ROADWAY STRUCTURES
4. INSTALL STONE CONSTRUCTION ENTRANCE PER DETAILS AT ANTICIPATED CONSTRUCTION ENTRANCES.
5. CUT TREES AND REMOVE STUMPS PER THE STUMP REMOVAL NOTES SHOWN HEREON. CLEAR THE AREAS FOR THE TEMPORARY SEDIMENT BASINS AND TEMPORARY SWALES
6. CONSTRUCT TEMPORARY STORMWATER DIVERSION BERM AND TEMPORARY SEDIMENT BASIN FOR THE PROJECT.
7. COMPLETE CLEARING OPERATIONS WITHIN ROADWAY LIMITS OF WORK FOR PROJECT.
8. STRIP AND STOCKPILE TOPSOIL FOR WITHIN ROADWAY AND DRAINAGE BASIN AREAS. STABILIZE TOPSOIL NOT SUBJECT TO IMMEDIATE USE WITH A TEMPORARY SEEDING MIXTURE. ALL STOCKPILES SHALL BE RINGED WITH SILT FENCE.
9. MASS GRADING – PERFORM EARTHWORK CUT TO FILLS FOR ROADWAY AND DRAINAGE BASINS AS DEPICTED HEREON. STABILIZE DISTURBED AREAS BY HAY AND SEED IN ACCORDANCE WITH THE ORDER OF CONDITIONS AND PROJECT PLANS.
10. INSTALL INFRASTRUCTURE IMPROVEMENTS FOR THE PROJECT (INCLUDING ROADWAY GRADING, STORM WATER PIPING AND BASINS, ETC.) AS DEPICTED HEREON.

PHASE 1C – SKYVIEW DRIVE STA. 24+00 TO 25+50 & EMERGENCY ACCESS

1. THE LIMITS OF CLEARING SHALL BE STAKED OUT PRIOR TO ANY CONSTRUCTION.
2. INSTALL EROSION CONTROL BARRIERS AS DEPICTED HEREON.
3. INSTALL EROSION CONTROL MEASURES WITHIN NEWLY CONSTRUCTED ROADWAY STRUCTURES
4. INSTALL STONE CONSTRUCTION ENTRANCE PER DETAILS AT ANTICIPATED CONSTRUCTION ENTRANCES.
5. CUT TREES AND REMOVE STUMPS PER THE STUMP REMOVAL NOTES SHOWN HEREON. CLEAR THE AREAS FOR THE TEMPORARY SEDIMENT BASINS AND TEMPORARY SWALES
6. CONSTRUCT TEMPORARY STORMWATER DIVERSION BERM AND TEMPORARY SEDIMENT BASIN FOR THE PROJECT.
7. COMPLETE CLEARING OPERATIONS WITHIN ROADWAY LIMITS OF WORK FOR PROJECT.
8. STRIP AND STOCKPILE TOPSOIL FOR WITHIN ROADWAY AND DRAINAGE BASIN AREAS. STABILIZE TOPSOIL NOT SUBJECT TO IMMEDIATE USE WITH A TEMPORARY SEEDING MIXTURE. ALL STOCKPILES SHALL BE RINGED WITH SILT FENCE.
9. MASS GRADING – PERFORM EARTHWORK CUT TO FILLS FOR ROADWAY AND DRAINAGE BASINS AS DEPICTED HEREON. STABILIZE DISTURBED AREAS BY HAY AND SEED IN ACCORDANCE WITH THE ORDER OF CONDITIONS AND PROJECT PLANS.
10. INSTALL INFRASTRUCTURE IMPROVEMENTS FOR THE PROJECT (INCLUDING ROADWAY GRADING, STORM WATER PIPING AND BASINS, ETC.) AS DEPICTED HEREON.

PHASE 2 – LOT DEVELOPMENT AND HOME-BUILDING

1. INSTALL EROSION CONTROL BARRIERS AS DEPICTED HEREON.
2. INSTALL EROSION CONTROL MEASURES WITHIN NEWLY CONSTRUCTED ROADWAY STRUCTURES
3. CUT TREES AND REMOVE STUMPS PER THE STUMP REMOVAL NOTES SHOWN HEREON.
4. CONSTRUCT TEMPORARY STORMWATER DIVERSION BERM AND TEMPORARY SEDIMENT BASIN FOR THE PROJECT.
5. CONSTRUCT BUILDING FOUNDATIONS
6. STABILIZE DISTURBED AREAS

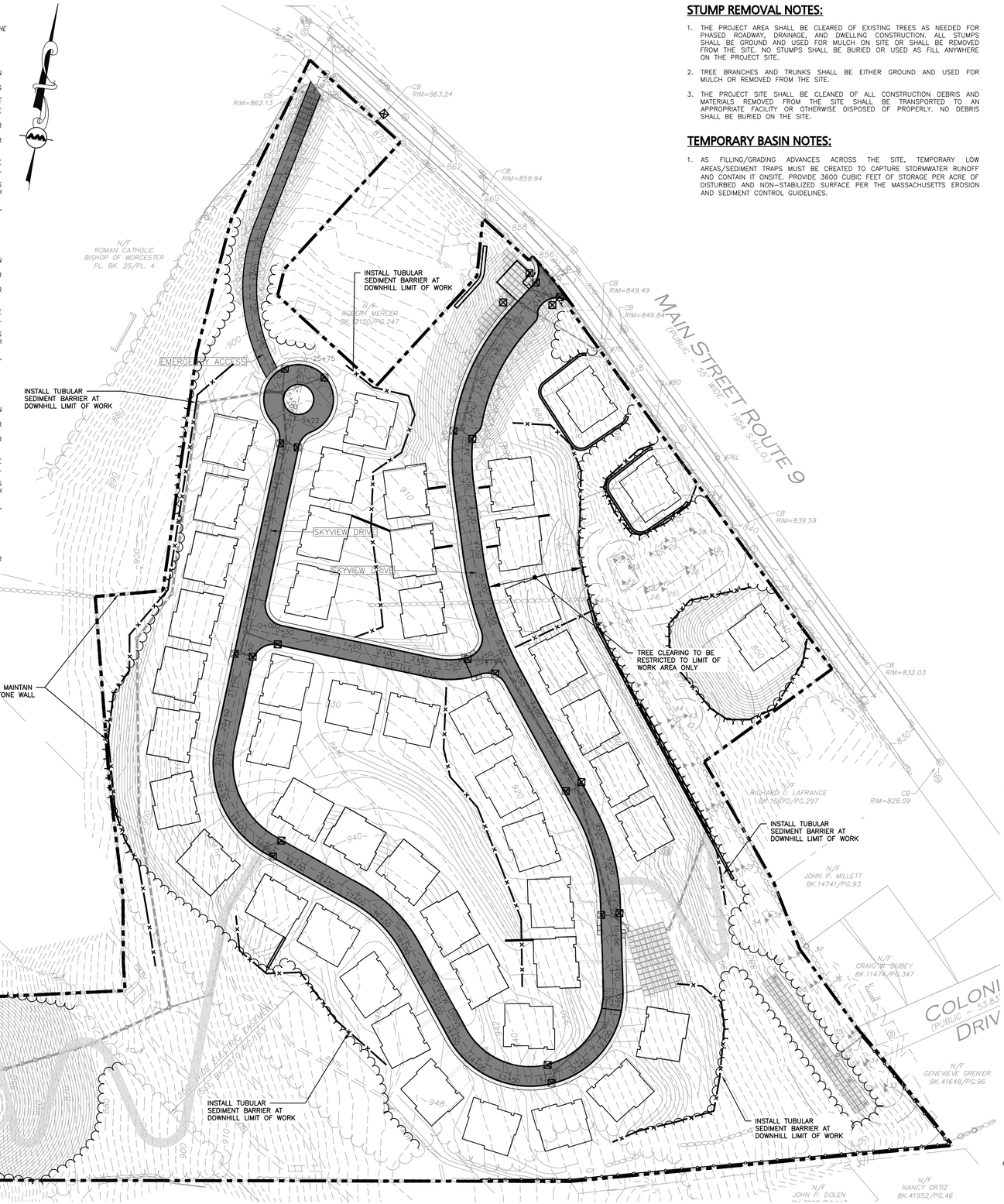

LEGEND

- LIMIT OF DISTURBANCE
- LIMIT OF 'CLEAR AND GRUB'
- TEMPORARY FENCE
- TUBULAR BARRIER
- CATCH BASIN FILTER
- STABILIZED ENTRANCE
- STOCKPILE/STAGING AREA

DIG SAFE

BEFORE YOU DIG CALL 811 OR 1-888-DIG-SAFE 1-888-344-7233

STUMP REMOVAL NOTES:

1. THE PROJECT AREA SHALL BE CLEARED OF EXISTING TREES AS NEEDED FOR PHASED ROADWAY, DRAINAGE, AND DWELLING CONSTRUCTION. ALL STUMPS SHALL BE GROUND AND USED FOR MULCH ON SITE OR SHALL BE REMOVED FROM THE SITE. NO STUMPS SHALL BE BURIED OR USED AS FILL ANYWHERE ON THE PROJECT SITE.
2. TREE BRANCHES AND TRUNKS SHALL BE EITHER GROUND AND USED FOR MULCH OR REMOVED FROM THE SITE.
3. THE PROJECT SITE SHALL BE CLEANED OF ALL CONSTRUCTION DEBRIS AND MATERIALS REMOVED FROM THE SITE SHALL BE TRANSPORTED TO AN APPROPRIATE FACILITY OR OTHERWISE DISPOSED OF PROPERLY. NO DEBRIS SHALL BE BURIED ON THE SITE.

TEMPORARY BASIN NOTES:

1. AS FILLING/GRADING ADVANCES ACROSS THE SITE, TEMPORARY LOW AREAS/SEDIMENT TRAPS MUST BE CREATED TO CAPTURE STORMWATER RUNOFF AND CONTAIN IT ONSITE. PROVIDE 3600 CUBIC FEET OF STORAGE PER ACRE OF DISTURBED AND NON-STABILIZED SURFACE PER THE MASSACHUSETTS EROSION AND SEDIMENT CONTROL GUIDELINES.

EROSION CONTROL NOTES

1. AS THIS PROJECT SHALL ALTER OVER ONE ACRE OF LAND, IT WILL REQUIRE FILING A NOTICE OF INTENT WITH THE EPA UNDER THE NPDES PHASE II PROGRAM AND WILL REQUIRE A STORMWATER POLLUTION PREVENTION PLAN (SWPP) TO BE FILED PRIOR TO ANY LAND DISTURBANCE. THE SWPP SHALL BE PROVIDED TO THE SITE CONTRACTOR PRIOR TO CONSTRUCTION AND SHALL BE ACCESSIBLE ON SITE DURING ALL CONSTRUCTION ACTIVITY.
2. THE CONTRACTOR SHALL REVIEW AND COMPLY WITH ALL REQUIREMENTS OF THE PROJECT "ORDER OF CONDITIONS" AS ISSUED BY THE TOWN OF LEICESTER CONSERVATION COMMISSION. THE CONTRACTOR AND ALL SUB-CONTRACTORS ARE TO BE MADE AWARE OF THE ORDER OF CONDITIONS AS GRANTED BY THE LEICESTER CONSERVATION COMMISSION AND ITS REGULATIONS APPLICABLE: TO THIS PROJECT. A COPY OF THIS ORDER IS TO BE READILY AVAILABLE ON SITE AT ALL TIMES.
3. THE SEDIMENTATION AND EROSION CONTROLS DEPICTED HEREON ARE THE MINIMUM REQUIRED. THE CONTRACTOR IS RESPONSIBLE FOR THE PROPER MAINTENANCE OF ALL EROSION CONTROLS AND SHALL INSTALL ADDITIONAL MITIGATION MEASURES AS MAY BE NECESSARY TO ENSURE PROTECTION OF ALL NATURAL RESOURCES.
4. PRIOR TO THE START OF ANY CONSTRUCTION, ALL SEDIMENTATION AND EROSION CONTROL MEASURES SHALL BE INSTALLED AS DEPICTED HEREON. THE CONTRACTOR SHALL MAINTAIN THESE MEASURES UNTIL ALL WORK IS COMPLETED AND ALL AREAS HAVE BEEN STABILIZED.
5. AT NO TIME SHOULD HEAVY EQUIPMENT CROSS THE EROSION CONTROL BARRIERS OR OPERATE BEYOND THE LIMIT OF WORK DEPICTED HEREON. ALL FUELING OF CONSTRUCTION EQUIPMENT IS TO BE DONE IN THE UPLANDS OUTSIDE OF THE 100' BUFFER ZONE.
6. TEMPORARY STABILIZATION OF DISTURBED AREAS IS TO LIMIT EROSION TOWARD THE WETLAND AREAS. ALL TRENCHES ARE TO BE FILLED ON A DAILY BASIS WITH SPECIAL CARE TAKEN TO AVOID ROUTING RAINFALL THROUGH GULLIES TOWARD THE WETLAND AREAS. TEMPORARY DETENTION BASINS ARE TO BE INSTALLED IN AREAS PRONE TO CHANNEL FLOWS DURING PERIODS OF HIGH INTENSITY RAINFALL.
7. THE CONTRACTOR IS TO USE PROPER JUDGMENT RELATIVE TO CONSTRUCTION PRACTICES DURING ADVERSE WEATHER CONDITIONS OR PERIODS OF HIGH GROUNDWATER. NO WORK IS TO BE PERFORMED NEAR THE WETLAND AREAS DURING PERIODS OF HEAVY RAINFALL.
8. PERIODIC MAINTENANCE OF THE EROSION CONTROL MEASURES IS REQUIRED IN ORDER TO INSURE THE PROPER PROTECTION OF THE RESOURCE AREAS. ALL EROSION CONTROL STRUCTURES ARE TO BE INSPECTED ON A WEEKLY BASIS OR WHENEVER THERE IS A STORM EVENT EXCEEDING ½"OF RAIN IN TWENTY FOUR HOURS.
9. THE TREE CLEARING REMOVAL LIMITS SHALL NOT EXTEND BEYOND THE SILTFENCE/HAYBALE EROSION CONTROL BARRIERS AND THE LIMIT OF WORK. AREAS OF EXISTING VEGETATION TO REMAIN ARE TO BE PROTECTED THROUGHOUT CONSTRUCTION.
10. THE BASE OF ALL STOCKPILES SHALL BE CONTAINED WITHIN THE EROSION CONTROL MEASURES LIMITS. STOCKPILES TO BE LEFT OVER 30 DAYS SHALL BE SEEDED WITH ANNUAL RYE GRASS.
11. THE FUNCTIONING OF THE TEMPORARY SEDIMENT CONTROLS OR CONSTRUCTION OPERATIONS SHALL NOT CAUSE NOTICEABLE SEDIMENT PLUMES. IF PLUMES OCCUR, THE CONTRACTOR SHALL STOP WORK AND INSTALL ADDITIONAL SEDIMENTATION CONTROLS IMMEDIATELY TO PREVENT FURTHER SEDIMENTATION.
12. THE CONTRACTOR SHALL REMOVE AND DISPOSE OF ALL ACCUMULATED SEDIMENT AS REQUIRED BY THE CONSERVATION COMMISSION OR AS DIRECTED BY THE ENGINEER.
13. AFTER THE CONSTRUCTION/INSTALLATION OF THE PERMANENT DRAINAGE /INFRASTRUCTURE, THE CONTRACTOR SHALL INSTALL AND MAINTAIN THE APPROPRIATE SEDIMENTATION CONTROLS TO PROTECT THE INTEGRITY OF THE STRUCTURES DURING THE ONGOING CONSTRUCT/ON. ALL CATCH BASINS SHALL HAVE A SILT SACK CATCH BASIN FILTER INSTALLED. THE FILTERS SHALL BE MAINTAINED AND/OR REPLACED AS NECESSARY UNTIL THE CONSTRUCTION IS COMPLETED.
14. ALL DISTURBED NON-PAVED AREAS WITHIN THE PROJECT LIMIT OF WORK SHALL BE DRESSED WITH A MINIMUM OF FOUR INCHES (4") OF SCREENED LOAM AND SHALL BE SEEDED WITH AN APPROVED GRASS MIX AND MULCHED AS SOON AS POSSIBLE IN ORDER TO INSURE THE RAPID STABILIZATION OF THE EROSION PRONE AREAS. A CONSERVATION SEED MIXTURE OF 20% ANNUAL RYEGRASS, 30% CREEPING RED FESCUE, 30% CHEWINGS FESCUE AND 20% PERENNIAL RYEGRASS IS RECOMMENDED. IF PERMANENT SEEDING CANNOT BE INSTALLED IMMEDIATELY AFTER FINAL GRADING, THE AREAS ARE TO BE TEMPORARILY MULCHED TO STABILIZE ALL SLOPES UPON COMPLETION OF WORK TO PREVENT EROSION OF SOILS INTO THE RESOURCE AREAS AND THEIR ASSOCIATED BUFFER ZONES. DURING THE GROW-IN PERIOD, TEMPORARY EROSION CONTROLS (I.E. BARK MULCH OR STRAW) IS TO BE USED TO PREVENT EROSION DURING PERIODS OF RAINFALL OR SNOW MELT. WHERE PRACTICAL DURING CONSTRUCTION, DISTURBED AREAS SHALL BE STABILIZED BY TEMPORARILY SEEDING OR MULCHING.
15. ALL DISTURBED AREAS TO BE LEFT DORMANT FOR MORE THAN 60 DAYS SHALL BE STABILIZED BY TEMPORARILY SEEDING OR MULCHING.
16. DEWATERING OPERATIONS, IF REQUIRED SHALL DISCHARGE ONTO STABILIZED AREAS AND ALL DISCHARGE WATER IS TO PASS THROUGH SEDIMENTATION CONTROL DEVICES TO PREVENT IMPACTS UPON THE WETLANDS RESOURCES, DRAINAGE SYSTEMS. AND ABUTTING PROPERTIES.
17. ALL TEMPORARY SEDIMENTATION AND EROSION CONTROL MEASURES SHALL BE REMOVED IN THEIR ENTIRETY AFTER FINAL SITE STABILIZATION AND ISSUANCE OF THE FINAL CERTIFICATE OF COMPLIANCE BY THE CONSERVATION COMMISSION.
18. THE APPLICANT SHALL NOTIFY THE LEICESTER CONSERVATION COMMISSION ONCE THE JURISDICTIONAL WORK HAS BEEN COMPLETED AND ENTIRE SITE HAS BEEN PROPERLY STABILIZED. UPON APPROVAL OF THE WORK SUBJECT TO THE ORDER OF CONDITIONS. THE APPLICANT IS TO RECEIVE A CERTIFICATE OF COMPLIANCE; THAT IS TO BE RECORDED AT THE WORCESTER REGISTRY OF DEEDS.
19. CONTRACTOR SHALL APPLY STABILIZATION FABRIC TO ALL SLOPES 3H:1V OR STEEPER. CONTRACTOR SHALL GRASS DISTURBED AREAS IN ACCORDANCE WITH COUNTY SPECIFICATIONS UNTIL A HEALTHY STAND OF GRASS IS OBTAINED.

GENERAL NOTES:

1. THE CONTRACTOR IS SPECIFICALLY CAUTIONED THAT THE LOCATION AND/OR ELEVATION OF EXISTING UTILITIES AND STRUCTURES AS SHOWN ON THESE PLANS IS BASED ON RECORDS OF VARIOUS UTILITY COMPANIES AND WHERE POSSIBLE, MEASUREMENTS TAKEN IN THE FIELD. THIS INFORMATION IS NOT TO BE RELIED ON AS BEING EXACT OR COMPLETE. THE LOCATION OF ALL UNDERGROUND UTILITIES AND STRUCTURES SHALL BE VERIFIED IN THE FIELD BY THE CONTRACTOR PRIOR TO THE START OF CONSTRUCTION. THE CONTRACTOR MUST CONTACT THE APPROPRIATE UTILITY COMPANY, ANY GOVERNING PERMITTING AUTHORITY, AND "DIGSAFE" AT LEAST 72 HOURS PRIOR TO ANY EXCAVATION WORK TO REQUEST EXACT FIELD LOCATION OF UTILITIES.
2. GRADING / DEMOLITION OUTSIDE OF THE PROJECT BOUNDARIES (IF ANY) REQUIRES A TEMPORARY CONSTRUCTION/GRADING EASEMENT FROM THE LANDOWNER (BY OTHERS).
3. ALTHOUGH CERTAIN ITEMS HAVE BEEN NOTED ON THIS DRAWING FOR DEMOLITION, NO ATTEMPT HAS BEEN MADE TO DELINEATE EACH AND EVERY ITEM THAT REQUIRES DEMOLITION FOR THE COMPLETION OF THE PROJECT. THE CONTRACTOR WILL BE RESPONSIBLE FOR ALL NECESSARY DEMOLITION WORK TO COMPLETE THE PROJECT. ALLEN & MAJOR ASSOCIATES, INC. IS NOT RESPONSIBLE FOR SITE DEMOLITION ITEMS NOT SHOWN ON THE SURVEY, OR SPECIFICALLY NOTED. THE DEMOLITION NOTES AND ARROWS ON THIS PLAN ARE TYPICAL AND DO NOT REFLECT QUANTITY.
4. WRITTEN DIMENSIONS ON THIS PLAN TAKE PRECEDENCE OVER SCALED DIMENSIONS. THE CONTRACTOR SHALL USE CAUTION WHEN SCALING REPRODUCED PLANS. IN THE EVENT OF A CONFLICT BETWEEN THIS PLAN SET AND ANY OTHER DRAWINGS AND/OR SPECIFICATIONS OR CONDITIONS, THE ENGINEER SHALL BE NOTIFIED BY THE CONTRACTOR.
5. THE INFORMATION SHOWN ON THIS PLAN IS THE SOLE PROPERTY OF ALLEN & MAJOR ASSOCIATES, INC. ITS INTENDED USE IS TO PROVIDE INFORMATION. ANY ALTERATION, MISUSE, OR RECALCULATION OF INFORMATION OR DATA WITHOUT THE EXPRESSED, WRITTEN CONSENT OF ALLEN & MAJOR ASSOCIATES, INC. IS STRICTLY PROHIBITED.

GRAPHIC SCALE

80 0 40 80 160 320

(IN FEET)
1 inch = 80 ft.

R:\PROJECTS\2889-01\CIVIL\DRAWINGS\CURRENT\C-2889-01_SITE-PREP.DWG

APPROVAL UNDER SITE PLAN APPROVAL REQUIRED. SUBJECT TO A COVENANT TO BE RECORDED HEREWITH.

DATE: _____

LEICESTER PLANNING BOARD

I CERTIFY THAT NO NOTICE OF APPEAL WAS RECEIVED DURING THE TWENTY (20) RECORDING DAYS NEXT AFTER RECEIPT AND OF NOTICE FROM THE PLANNING BOARD OF THE APPROVAL OF THIS PLAN

TOWN CLERK – TOWN OF LEICESTER

COMMONWEALTH OF MASSACHUSETTS MICHAEL A. MALYNOWSKI CIVIL No. 47269 REGISTERED PROFESSIONAL ENGINEER

Digitally signed by Michael Malynowski
Date: 2022.02.06 21:17:29 -05'00'

PROFESSIONAL ENGINEER FOR ALLEN & MAJOR ASSOCIATES, INC.

REV	DATE	DESCRIPTION
4	02-07-22	MISC. REVISIONS PER TOWN COMMENTS
3	12-14-21	MISC. REVISIONS PER TOWN COMMENTS
2	11-10-21	MISC. REVISIONS PER TOWN COMMENTS
1	10-05-21	MISC. REVISIONS PER TOWN COMMENTS

APPLICANT:

MKEP 770 LLC
265 SUNRISE HIGHWAY, SUITE 1368
ROCKVILLE CENTER, NY 11570

PROJECT:

SKYVIEW ESTATES RESIDENTIAL DEVELOPMENT

MAIN STREET
LEICESTER, MA

PROJECT NO.	2889-01	DATE:	09-17-21
SCALE:	1" = 80'	DWG. :	C-2889-01_Site-Prep
DESIGNED BY:	SM	CHECKED BY:	MAM

PREPARED BY:

ALLEN & MAJOR ASSOCIATES, INC.
civil engineering ♦ land surveying
environmental consulting ♦ landscape architecture
www.allenmajor.com
100 COMMERCE WAY, SUITE 5
WOBURN MA 01801
TEL: (781) 935-6889
FAX: (781) 935-2896

WOBURN, MA ♦ LAKEVILLE, MA ♦ MANCHESTER, NH

THIS DRAWING HAS BEEN PREPARED IN DIGITAL FORMAT. CLIENT/CLIENT'S REPRESENTATIVE OR CONSULTANTS MAY BE PROVIDED COPIES OF DRAWINGS AND SPECIFICATIONS FOR HIS/HER INFORMATION AND/OR SPECIFIC USE ON THIS PROJECT. DUE TO THE POTENTIAL THAT THE PROVIDED INFORMATION MAY BE MODIFIED UNINTENTIONALLY OR OTHERWISE, ALLEN & MAJOR ASSOCIATES, INC. MAY REMOVE ALL INDICATION OF THE DOCUMENT'S AUTHORSHIP ON THE DIGITAL MEDIA. PRINTED REPRESENTATIONS OR PORTABLE DOCUMENT FORMAT OF THE DRAWINGS AND SPECIFICATIONS ISSUED SHALL BE THE ONLY RECORD COPIES OF ALLEN & MAJOR ASSOCIATES, INC.'S WORK PRODUCT.

DRAWING TITLE:

PHASE 2
SITE PREPARATION PLAN

Copyright © 2022 Allen & Major Associates, Inc.
All Rights Reserved

SHEET No.

C-100C

LEGEND

- PROP. PROPERTY LINE
- CURB
- SIDEWALK
- ADA ACCESSIBLE RAMP
- BASELINE
- SIGN
- GRAVEL ACCESS
- ZONING DISTRICT LINE

UNIT DENSITY CALCULATION

BUSINESS (B)

	Acres	SF	Net Area Reduction Ratio	Net Area Reduction	Net Area Reduction
Lot Area	29.74	1,295,474			
Wetland Buffer		140,808	0.0%	0	140,808
Electrical Easement		127,766	0.0%	0	127,766
slopes of 20% or greater		262,318	0.0%	0	262,318
					530,893
subdivision roads and infrastructure			20.0%		152,916

	Lot		Buffers		Roads		Allowable
Net Acreage	1,295,474	-	530,893	-	152,916	=	611,665

Unit 1		Unit 2		Unit 3		Unit 4		Unit 5		
15,000	+	7,500	+	7,500	+	7,500	+	7,500	=	45,000

Net Acreage
611,665 - 45,000 = 566,665

	SF
Required Area per Unit over 6	2,000

Allowable Density
288

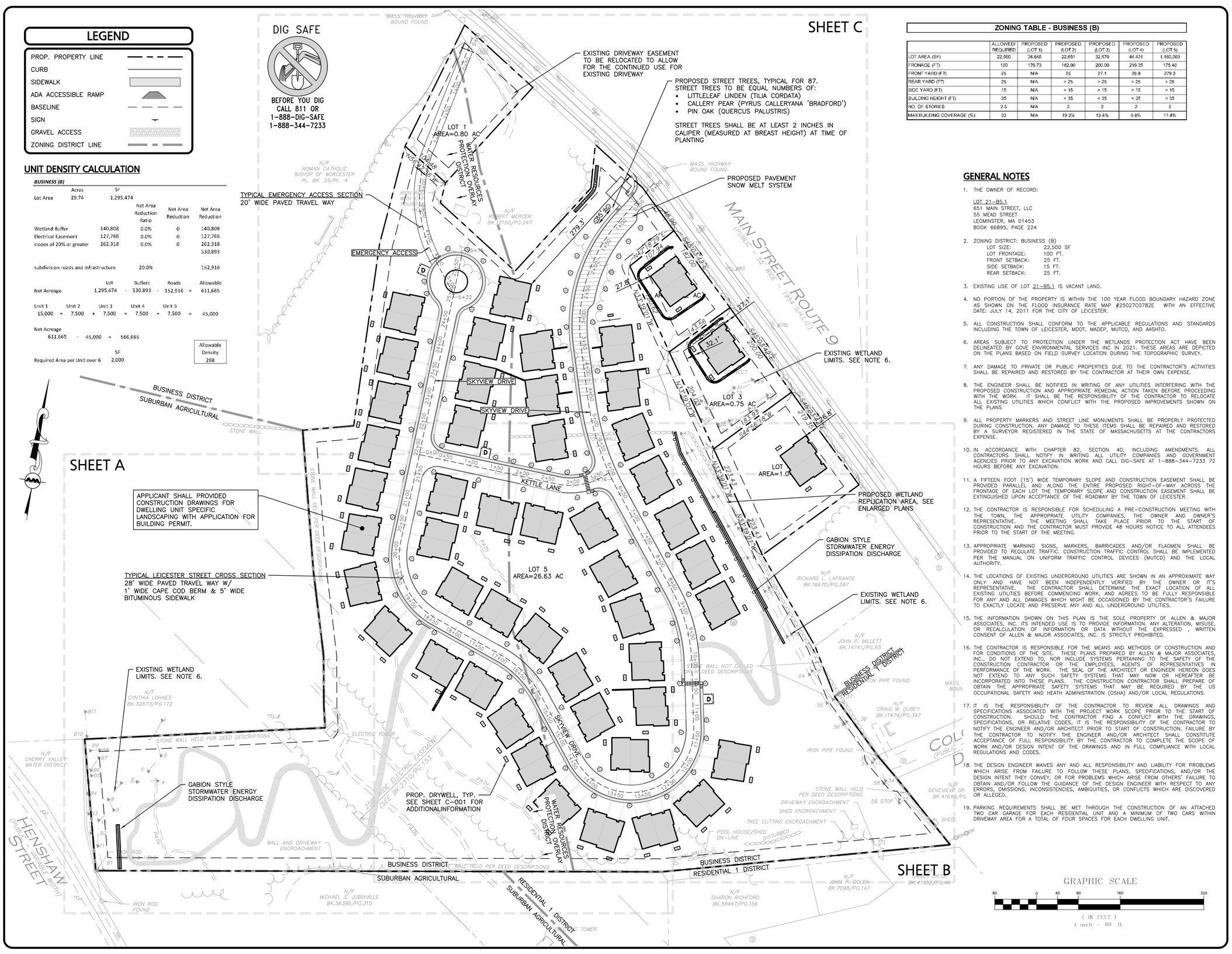

ZONING TABLE - BUSINESS (B)

	ALLOWED/ REQUIRED	PROPOSED (LOT 1)	PROPOSED (LOT 2)	PROPOSED (LOT 3)	PROPOSED (LOT 4)	PROPOSED (LOT 5)
LOT AREA (SF)	22,500	34,848	22,651	32,670	44,431	1,160,003
FRONAGE (FT)	100	176.73	182.00	200.00	219.35	175.40
FRONT YARD (FT)	25	N/A	25	27.1	26.8	279.3
REAR YARD (FT)	25	N/A	> 25	> 25	> 25	> 25
SIDE YARD (FT)	15	N/A	> 15	> 15	> 15	> 15
BUILDING HEIGHT (FT)	35	N/A	< 35	< 35	< 35	< 35
NO. OF STORIES	2.5	N/A	2	2	2	2
MAX BUILDING COVERAGE (%)	33	N/A	19.3%	13.4%	9.8%	17.4%

GENERAL NOTES

1. THE OWNER OF RECORD:

   LOT 21-B5.1
   651 MAIN STREET, LLC
   55 MEAD STREET
   LEOMINSTER, MA 01453
   BOOK 66895, PAGE 224

2. ZONING DISTRICT: BUSINESS (B)
   LOT SIZE: 22,500 SF
   LOT FRONTAGE: 100 FT.
   FRONT SETBACK: 25 FT.
   SIDE SETBACK: 15 FT.
   REAR SETBACK: 25 FT.

3. EXISTING USE OF LOT 21-B5.1 IS VACANT LAND.

4. NO PORTION OF THE PROPERTY IS WITHIN THE 100 YEAR FLOOD BOUNDARY HAZARD ZONE AS SHOWN ON THE FLOOD INSURANCE RATE MAP #25027C0782E WITH AN EFFECTIVE DATE: JULY 14, 2011 FOR THE CITY OF LEICESTER.

5. ALL CONSTRUCTION SHALL CONFORM TO THE APPLICABLE REGULATIONS AND STANDARDS INCLUDING THE TOWN OF LEICESTER, MDOT, MADEP, MUTCD, AND AASHTO.

6. AREAS SUBJECT TO PROTECTION UNDER THE WETLANDS PROTECTION ACT HAVE BEEN DELINEATED BY GOVE ENVIRONMENTAL SERVICES INC IN 2021. THESE AREAS ARE DEPICTED ON THE PLANS BASED ON FIELD SURVEY LOCATION DURING THE TOPOGRAPHIC SURVEY.

7. ANY DAMAGE TO PRIVATE OR PUBLIC PROPERTIES DUE TO THE CONTRACTOR'S ACTIVITIES SHALL BE REPAIRED AND RESTORED BY THE CONTRACTOR AT THEIR OWN EXPENSE.

8. THE ENGINEER SHALL BE NOTIFIED IN WRITING OF ANY UTILITIES INTERFERING WITH THE PROPOSED CONSTRUCTION AND APPROPRIATE REMEDIAL ACTION TAKEN BEFORE PROCEEDING WITH THE WORK. IT SHALL BE THE RESPONSIBILITY OF THE CONTRACTOR TO RELOCATE ALL EXISTING UTILITIES WHICH CONFLICT WITH THE PROPOSED IMPROVEMENTS SHOWN ON THE PLANS

9. ALL PROPERTY MARKERS AND STREET LINE MONUMENTS SHALL BE PROPERLY PROTECTED DURING CONSTRUCTION. ANY DAMAGE TO THESE ITEMS SHALL BE REPAIRED AND RESTORED BY A SURVEYOR REGISTERED IN THE STATE OF MASSACHUSETTS AT THE CONTRACTORS EXPENSE.

10. IN ACCORDANCE WITH CHAPTER 82, SECTION 40, INCLUDING AMENDMENTS. ALL CONTRACTORS SHALL NOTIFY IN WRITING ALL UTILITY COMPANIES AND GOVERNMENT AGENCIES PRIOR TO ANY EXCAVATION WORK AND CALL DIG-SAFE AT 1-888-344-7233 72 HOURS BEFORE ANY EXCAVATION.

11. A FIFTEEN FOOT (15') WIDE TEMPORARY SLOPE AND CONSTRUCTION EASEMENT SHALL BE PROVIDED PARALLEL AND ALONG THE ENTIRE PROPOSED RIGHT-OF-WAY ACROSS THE FRONTAGE OF EACH LOT THE TEMPORARY SLOPE AND CONSTRUCTION EASEMENT SHALL BE EXTINGUISHED UPON ACCEPTANCE OF THE ROADWAY BY THE TOWN OF LEICESTER.

12. THE CONTRACTOR IS RESPONSIBLE FOR SCHEDULING A PRE-CONSTRUCTION MEETING WITH THE TOWN, THE APPROPRIATE UTILITY COMPANIES, THE OWNER AND OWNER'S REPRESENTATIVE. THE MEETING SHALL TAKE PLACE PRIOR TO THE START OF CONSTRUCTION AND THE CONTRACTOR MUST PROVIDE 48 HOURS NOTICE TO ALL ATTENDEES PRIOR TO THE START OF THE MEETING.

13. APPROPRIATE WARNING SIGNS, MARKERS, BARRICADES AND/OR FLAGMEN SHALL BE PROVIDED TO REGULATE TRAFFIC. CONSTRUCTION TRAFFIC CONTROL SHALL BE IMPLEMENTED PER THE MANUAL ON UNIFORM TRAFFIC CONTROL DEVICES (MUTCD) AND THE LOCAL AUTHORITY.

14. THE LOCATIONS OF EXISTING UNDERGROUND UTILITIES ARE SHOWN IN AN APPROXIMATE WAY ONLY AND HAVE NOT BEEN INDEPENDENTLY VERIFIED BY THE OWNER OR IT'S REPRESENTATIVE. THE CONTRACTOR SHALL DETERMINE THE EXACT LOCATION OF ALL EXISTING UTILITIES BEFORE COMMENCING WORK, AND AGREES TO BE FULLY RESPONSIBLE FOR ANY AND ALL DAMAGES WHICH MIGHT BE OCCASIONED BY THE CONTRACTOR'S FAILURE TO EXACTLY LOCATE AND PRESERVE ANY AND ALL UNDERGROUND UTILITIES.

15. THE INFORMATION SHOWN ON THIS PLAN IS THE SOLE PROPERTY OF ALLEN & MAJOR ASSOCIATES, INC. ITS INTENDED USE IS TO PROVIDE INFORMATION. ANY ALTERATION, MISUSE, OR RECALCULATION OF INFORMATION OR DATA WITHOUT THE EXPRESSED , WRITTEN CONSENT OF ALLEN & MAJOR ASSOCIATES, INC. IS STRICTLY PROHIBITED.

16. THE CONTRACTOR IS RESPONSIBLE FOR THE MEANS AND METHODS OF CONSTRUCTION AND FOR CONDITIONS OF THE SITE. THESE PLANS PREPARED BY ALLEN & MAJOR ASSOCIATES, INC., DO NOT EXTEND TO, NOR INCLUDE SYSTEMS PERTAINING TO THE SAFETY OF THE CONSTRUCTION CONTRACTOR OR THE EMPLOYEES, AGENTS OF REPRESENTATIVES IN PERFORMANCE OF THE WORK. THE SEAL OF THE ARCHITECT OR ENGINEER HEREON DOES NOT EXTEND TO ANY SUCH SAFETY SYSTEMS THAT MAY NOW OR HEREAFTER BE INCORPORATED INTO THESE PLANS. THE CONSTRUCTION CONTRACTOR SHALL PREPARE OF OBTAIN THE APPROPRIATE SAFETY SYSTEMS THAT MAY BE REQUIRED BY THE US OCCUPATIONAL SAFETY AND HEATH ADMINISTRATION (OSHA) AND/OR LOCAL REGULATIONS.

17. IT IS THE RESPONSIBILITY OF THE CONTRACTOR TO REVIEW ALL DRAWINGS AND SPECIFICATIONS ASSOCIATED WITH THE PROJECT WORK SCOPE PRIOR TO THE START OF CONSTRUCTION. SHOULD THE CONTRACTOR FIND A CONFLICT WITH THE DRAWINGS, SPECIFICATIONS, OR RELATIVE CODES, IT IS THE RESPONSIBILITY OF THE CONTRACTOR TO NOTIFY THE ENGINEER AND/OR ARCHITECT PRIOR TO START OF CONSTRUCTION. FAILURE BY THE CONTRACTOR TO NOTIFY THE ENGINEER AND/OR ARCHITECT SHALL CONSTITUTE ACCEPTANCE OF FULL RESPONSIBILITY BY THE CONTRACTOR TO COMPLETE THE SCOPE OF WORK AND/OR DESIGN INTENT OF THE DRAWINGS AND IN FULL COMPLIANCE WITH LOCAL REGULATIONS AND CODES.

18. THE DESIGN ENGINEER WAIVES ANY AND ALL RESPONSIBILITY AND LIABILITY FOR PROBLEMS WHICH ARISE FROM FAILURE TO FOLLOW THESE PLANS, SPECIFICATIONS, AND/OR THE DESIGN INTENT THEY CONVEY, OR FOR PROBLEMS WHICH ARISE FROM OTHERS' FAILURE TO OBTAIN AND/OR FOLLOW THE GUIDANCE OF THE DESIGN ENGINEER WITH RESPECT TO ANY ERRORS, OMISSIONS, INCONSISTENCIES, AMBIGUITIES, OR CONFLICTS WHICH ARE DISCOVERED OR ALLEGED.

19. PARKING REQUIREMENTS SHALL BE MET THROUGH THE CONSTRUCTION OF AN ATTACHED TWO CAR GARAGE FOR EACH RESIDENTIAL UNIT AND A MINIMUM OF TWO CARS WITHIN DRIVEWAY AREA FOR A TOTAL OF FOUR SPACES FOR EACH DWELLING UNIT.

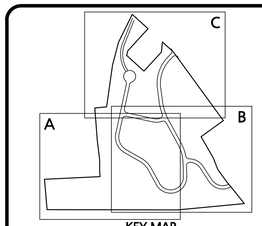

KEY MAP
NOT TO SCALE

APPROVAL UNDER SITE PLAN APPROVAL REQUIRED. SUBJECT TO A COVENANT TO BE RECORDED HEREWITH.

DATE: _____

LEICESTER PLANNING BOARD

I CERTIFY THAT NO NOTICE OF APPEAL WAS RECEIVED DURING THE TWENTY (20) RECORDING DAYS NEXT AFTER RECEIPT AND OF NOTICE FROM THE PLANNING BOARD OF THE APPROVAL OF THIS PLAN

TOWN CLERK, TOWN OF LEICESTER

COMMONWEALTH OF MASSACHUSETTS
MICHAEL A. MALYNOWSKI
CIVIL
No. 47269
REGISTERED PROFESSIONAL ENGINEER

Digitally signed by Michael Malynowski
Date: 2022.02.06 21:17:29 -05'00'

PROFESSIONAL ENGINEER FOR
ALLEN & MAJOR ASSOCIATES, INC.

REV	DATE	DESCRIPTION
4	02-07-22	MISC. REVISIONS PER TOWN COMMENTS
3	12-14-21	MISC. REVISIONS PER TOWN COMMENTS
2	11-10-21	MISC. REVISIONS PER TOWN COMMENTS
1	10-05-21	MISC. REVISIONS PER TOWN COMMENTS

APPLICANT:
MKEP 770 LLC
265 SUNRISE HIGHWAY, SUITE 1368
ROCKVILLE CENTER, NY 11570

PROJECT:
SKYVIEW ESTATES RESIDENTIAL DEVELOPMENT
MAIN STREET
LEICESTER, MA

PROJECT NO.	2889-01	DATE:	09-17-21
SCALE:	1" = 80'	DWG. :	C:2889-01_Layout & Materials
DESIGNED BY:	SM	CHECKED BY:	MAM

PREPARED BY:

ALLEN & MAJOR ASSOCIATES, INC.
civil engineering ♦ land surveying
environmental consulting ♦ landscape architecture
www.allenmajor.com
100 COMMERCE WAY, SUITE 5
WOBURN MA 01801
TEL: (781) 935-6889
FAX: (781) 935-2896
WOBURN, MA ♦ LAKEVILLE, MA ♦ MANCHESTER, NH

THIS DRAWING HAS BEEN PREPARED IN DIGITAL FORMAT. CLIENT/CLIENTS REPRESENTATIVE OR CONSULTANTS MAY BE PROVIDED COPIES OF DRAWINGS AND SPECIFICATIONS FOR HIS/HER INFORMATION AND/OR SPECIFIC USE ON THIS PROJECT. DUE TO THE POTENTIAL THAT THE PROVIDED INFORMATION MAY BE MODIFIED UNINTENTIONALLY OR OTHERWISE, ALLEN & MAJOR ASSOCIATES, INC. MAY REMOVE ALL INDICATION OF THE DOCUMENT'S AUTHORSHIP ON THE DIGITAL MEDIA. PRINTED REPRESENTATIONS OR PORTABLE DOCUMENT FORMAT OF THE DRAWINGS AND SPECIFICATIONS ISSUED SHALL BE THE ONLY RECORD COPIES OF ALLEN & MAJOR ASSOCIATES, INC.'S WORK PRODUCT.

DRAWING TITLE:
OVERALL SITE LAYOUT
KEY PLAN

Copyright © 2022 Allen & Major Associates, Inc.
All Rights Reserved

SHEET No.
C-101

R:\PROJECTS\2889-01\CIVIL\DRAWINGS\CURRENT\C-2889-01_LAYOUT & MATERIALS.DWG

LEGEND

- PROP. PROPERTY LINE
- CURB
- SIDEWALK
- ADA ACCESSIBLE RAMP
- BASELINE
- SIGN
- GRAVEL ACCESS
- ZONING DISTRICT LINE

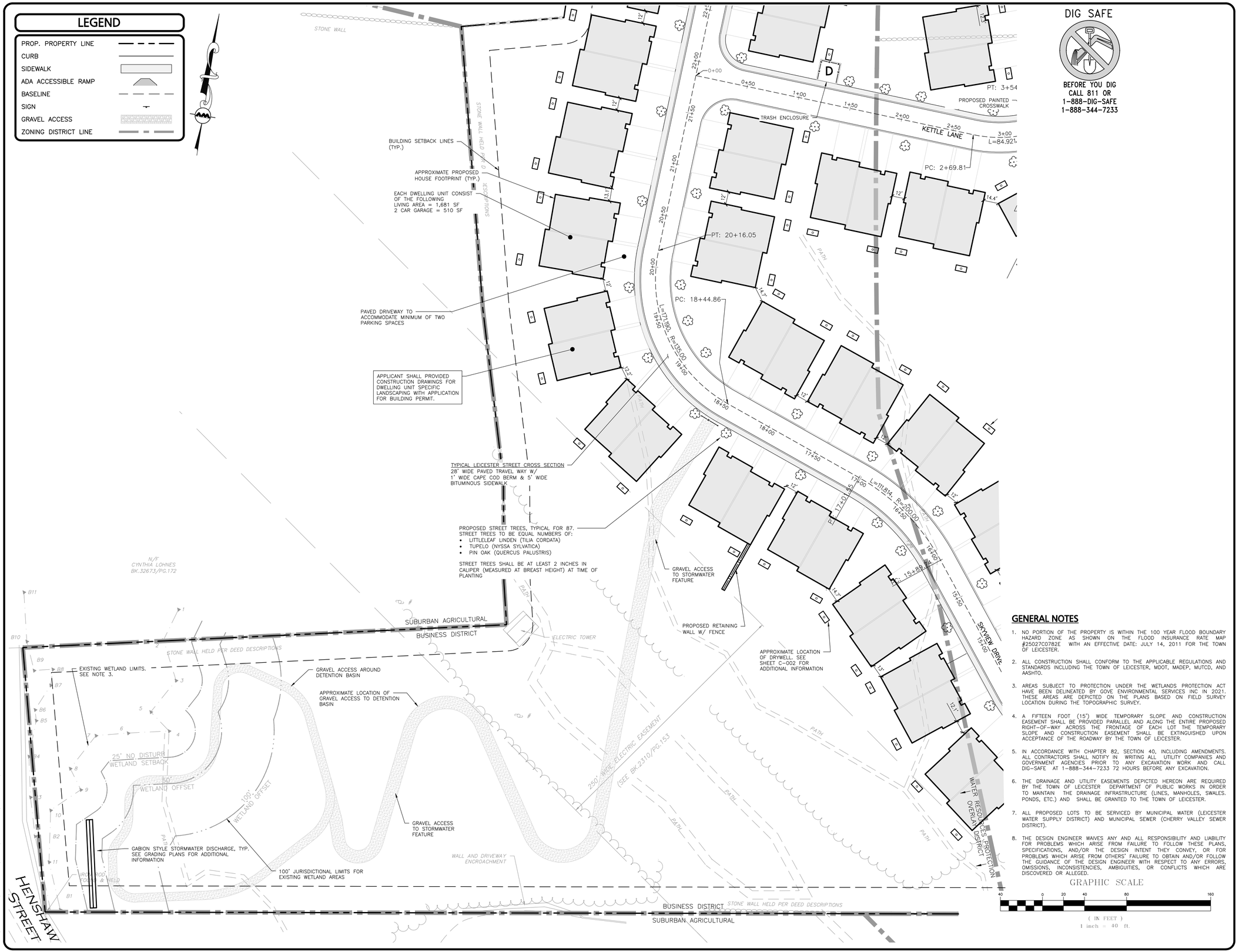

DIG SAFE

BEFORE YOU DIG
CALL 811 OR
1-888-DIG-SAFE
1-888-344-7233

GENERAL NOTES

1. NO PORTION OF THE PROPERTY IS WITHIN THE 100 YEAR FLOOD BOUNDARY HAZARD ZONE AS SHOWN ON THE FLOOD INSURANCE RATE MAP #25027C0782E WITH AN EFFECTIVE DATE: JULY 14, 2011 FOR THE TOWN OF LEICESTER.
2. ALL CONSTRUCTION SHALL CONFORM TO THE APPLICABLE REGULATIONS AND STANDARDS INCLUDING THE TOWN OF LEICESTER, MDOT, MADEP, MUTCD, AND AASHTO.
3. AREAS SUBJECT TO PROTECTION UNDER THE WETLANDS PROTECTION ACT HAVE BEEN DELINEATED BY GOVE ENVIRONMENTAL SERVICES INC IN 2021. THESE AREAS ARE DEPICTED ON THE PLANS BASED ON FIELD SURVEY LOCATION DURING THE TOPOGRAPHIC SURVEY.
4. A FIFTEEN FOOT (15') WIDE TEMPORARY SLOPE AND CONSTRUCTION EASEMENT SHALL BE PROVIDED PARALLEL AND ALONG THE ENTIRE PROPOSED RIGHT-OF-WAY ACROSS THE FRONTAGE OF EACH LOT THE TEMPORARY SLOPE AND CONSTRUCTION EASEMENT SHALL BE EXTINGUISHED UPON ACCEPTANCE OF THE ROADWAY BY THE TOWN OF LEICESTER.
5. IN ACCORDANCE WITH CHAPTER 82, SECTION 40, INCLUDING AMENDMENTS. ALL CONTRACTORS SHALL NOTIFY IN WRITING ALL UTILITY COMPANIES AND GOVERNMENT AGENCIES PRIOR TO ANY EXCAVATION WORK AND CALL DIG-SAFE AT 1-888-344-7233 72 HOURS BEFORE ANY EXCAVATION.
6. THE DRAINAGE AND UTILITY EASEMENTS DEPICTED HEREON ARE REQUIRED BY THE TOWN OF LEICESTER DEPARTMENT OF PUBLIC WORKS IN ORDER TO MAINTAIN THE DRAINAGE INFRASTRUCTURE (LINES, MANHOLES, SWALES. PONDS, ETC.) AND SHALL BE GRANTED TO THE TOWN OF LEICESTER.
7. ALL PROPOSED LOTS TO BE SERVICED BY MUNICIPAL WATER (LEICESTER WATER SUPPLY DISTRICT) AND MUNICIPAL SEWER (CHERRY VALLEY SEWER DISTRICT).
8. THE DESIGN ENGINEER WAIVES ANY AND ALL RESPONSIBILITY AND LIABILITY FOR PROBLEMS WHICH ARISE FROM FAILURE TO FOLLOW THESE PLANS, SPECIFICATIONS, AND/OR THE DESIGN INTENT THEY CONVEY, OR FOR PROBLEMS WHICH ARISE FROM OTHERS' FAILURE TO OBTAIN AND/OR FOLLOW THE GUIDANCE OF THE DESIGN ENGINEER WITH RESPECT TO ANY ERRORS, OMISSIONS, INCONSISTENCIES, AMBIGUITIES, OR CONFLICTS WHICH ARE DISCOVERED OR ALLEGED.

GRAPHIC SCALE

40 0 20 40 80 160

(IN FEET)
1 inch = 40 ft.

R:\PROJECTS\2889-01\CIVIL\DRAWINGS\CURRENT\C-2889-01_LAYOUT & MATERIALS.DWG

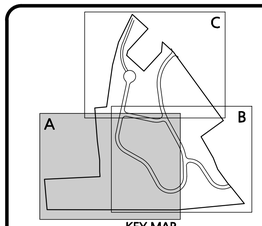

KEY MAP
NOT TO SCALE

APPROVAL UNDER SITE PLAN APPROVAL REQUIRED. SUBJECT TO A COVENANT TO BE RECORDED HEREWITH.

DATE: _____

LEICESTER PLANNING BOARD

I CERTIFY THAT NO NOTICE OF APPEAL WAS RECEIVED DURING THE TWENTY (20) RECORDING DAYS NEXT AFTER RECEIPT AND OF NOTICE FROM THE PLANNING BOARD OF THE APPROVAL OF THIS PLAN

TOWN CLERK, TOWN OF LEICESTER

COMMONWEALTH OF MASSACHUSETTS
MICHAEL A. MALYNOWSKI
CIVIL
No. 47269
REGISTERED PROFESSIONAL ENGINEER

Digitally signed by Michael Malynowski
Date: 2022.02.06 21:17:29 -05'00'

PROFESSIONAL ENGINEER FOR
ALLEN & MAJOR ASSOCIATES, INC.

REV	DATE	DESCRIPTION
4	02-07-22	MISC. REVISIONS PER TOWN COMMENTS
3	12-14-21	MISC. REVISIONS PER TOWN COMMENTS
2	11-10-21	MISC. REVISIONS PER TOWN COMMENTS
1	10-05-21	MISC. REVISIONS PER TOWN COMMENTS

APPLICANT:

MKEP 770 LLC
265 SUNRISE HIGHWAY, SUITE 1368
ROCKVILLE CENTER, NY 11570

PROJECT:

SKYVIEW ESTATES RESIDENTIAL DEVELOPMENT

MAIN STREET
LEICESTER, MA

PROJECT NO.	2889-01	DATE:	09-17-21
SCALE:	1" = 40'	DWG. :	C2889-01_Layout & Materials
DESIGNED BY:	SM	CHECKED BY:	MAM

PREPARED BY:

ALLEN & MAJOR ASSOCIATES, INC.
civil engineering ♦ land surveying
environmental consulting ♦ landscape architecture
www.allenmajor.com
100 COMMERCE WAY, SUITE 5
WOBURN MA 01801
TEL: (781) 935-6889
FAX: (781) 935-2896

WOBURN, MA ♦ LAKEVILLE, MA ♦ MANCHESTER, NH

THIS DRAWING HAS BEEN PREPARED IN DIGITAL FORMAT. CLIENT/CLIENT'S REPRESENTATIVE OR CONSULTANTS MAY BE PROVIDED COPIES OF DRAWINGS AND SPECIFICATIONS FOR HIS/HER INFORMATION AND/OR SPECIFIC USE ON THIS PROJECT. DUE TO THE POTENTIAL THAT THE PROVIDED INFORMATION MAY BE MODIFIED UNINTENTIONALLY OR OTHERWISE, ALLEN & MAJOR ASSOCIATES, INC. MAY REMOVE ALL INDICATION OF THE DOCUMENT'S AUTHORSHIP ON THE DIGITAL MEDIA. PRINTED REPRESENTATIONS OR PORTABLE DOCUMENT FORMAT OF THE DRAWINGS AND SPECIFICATIONS ISSUED SHALL BE THE ONLY RECORD COPIES OF ALLEN & MAJOR ASSOCIATES, INC.'S WORK PRODUCT.

DRAWING TITLE:

ENLARGED SITE LAYOUT PLAN

Copyright © 2022 Allen & Major Associates, Inc.
All Rights Reserved

SHEET No.

C-101A

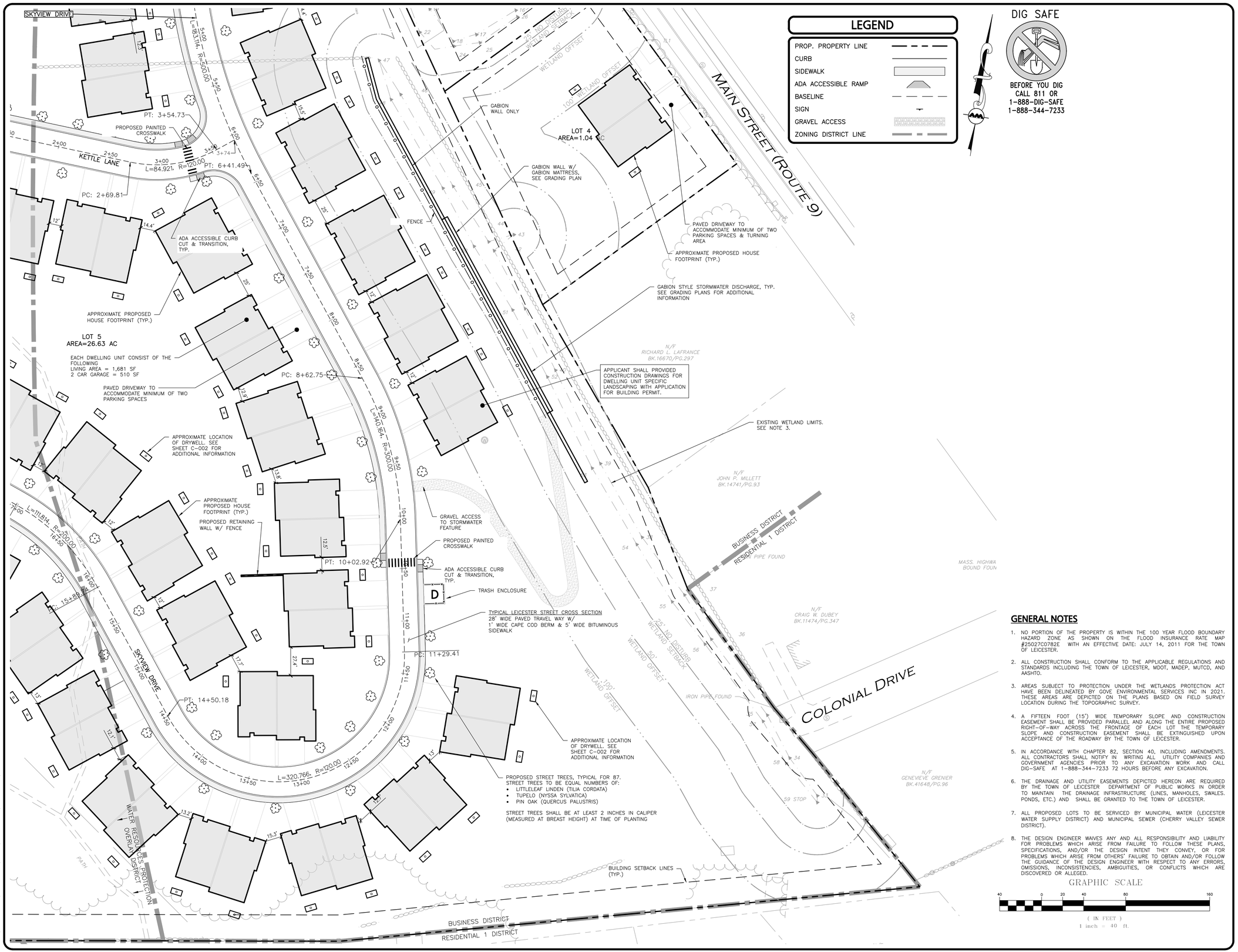

LEGEND

- PROP. PROPERTY LINE
- CURB
- SIDEWALK
- ADA ACCESSIBLE RAMP
- BASELINE
- SIGN
- GRAVEL ACCESS
- ZONING DISTRICT LINE

DIG SAFE

BEFORE YOU DIG
CALL 811 OR
1-888-DIG-SAFE
1-888-344-7233

GENERAL NOTES

1. NO PORTION OF THE PROPERTY IS WITHIN THE 100 YEAR FLOOD BOUNDARY HAZARD ZONE AS SHOWN ON THE FLOOD INSURANCE RATE MAP #25027C0782E WITH AN EFFECTIVE DATE: JULY 14, 2011 FOR THE TOWN OF LEICESTER.
2. ALL CONSTRUCTION SHALL CONFORM TO THE APPLICABLE REGULATIONS AND STANDARDS INCLUDING THE TOWN OF LEICESTER, MDOT, MADEP, MUTCD, AND AASHTO.
3. AREAS SUBJECT TO PROTECTION UNDER THE WETLANDS PROTECTION ACT HAVE BEEN DELINEATED BY GOVE ENVIRONMENTAL SERVICES INC IN 2021. THESE AREAS ARE DEPICTED ON THE PLANS BASED ON FIELD SURVEY LOCATION DURING THE TOPOGRAPHIC SURVEY.
4. A FIFTEEN FOOT (15') WIDE TEMPORARY SLOPE AND CONSTRUCTION EASEMENT SHALL BE PROVIDED PARALLEL AND ALONG THE ENTIRE PROPOSED RIGHT-OF-WAY ACROSS THE FRONTAGE OF EACH LOT THE TEMPORARY SLOPE AND CONSTRUCTION EASEMENT SHALL BE EXTINGUISHED UPON ACCEPTANCE OF THE ROADWAY BY THE TOWN OF LEICESTER.
5. IN ACCORDANCE WITH CHAPTER 82, SECTION 40, INCLUDING AMENDMENTS. ALL CONTRACTORS SHALL NOTIFY IN WRITING ALL UTILITY COMPANIES AND GOVERNMENT AGENCIES PRIOR TO ANY EXCAVATION WORK AND CALL DIG-SAFE AT 1-888-344-7233 72 HOURS BEFORE ANY EXCAVATION.
6. THE DRAINAGE AND UTILITY EASEMENTS DEPICTED HEREON ARE REQUIRED BY THE TOWN OF LEICESTER DEPARTMENT OF PUBLIC WORKS IN ORDER TO MAINTAIN THE DRAINAGE INFRASTRUCTURE (LINES, MANHOLES, SWALES. PONDS, ETC.) AND SHALL BE GRANTED TO THE TOWN OF LEICESTER.
7. ALL PROPOSED LOTS TO BE SERVICED BY MUNICIPAL WATER (LEICESTER WATER SUPPLY DISTRICT) AND MUNICIPAL SEWER (CHERRY VALLEY SEWER DISTRICT).
8. THE DESIGN ENGINEER WAIVES ANY AND ALL RESPONSIBILITY AND LIABILITY FOR PROBLEMS WHICH ARISE FROM FAILURE TO FOLLOW THESE PLANS, SPECIFICATIONS, AND/OR THE DESIGN INTENT THEY CONVEY, OR FOR PROBLEMS WHICH ARISE FROM OTHERS' FAILURE TO OBTAIN AND/OR FOLLOW THE GUIDANCE OF THE DESIGN ENGINEER WITH RESPECT TO ANY ERRORS, OMISSIONS, INCONSISTENCIES, AMBIGUITIES, OR CONFLICTS WHICH ARE DISCOVERED OR ALLEGED.

GRAPHIC SCALE

40 0 20 40 80 160

(IN FEET)
1 inch = 40 ft.

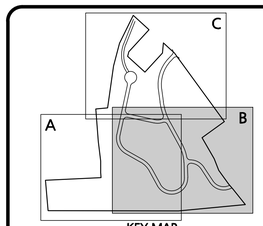

KEY MAP
NOT TO SCALE

APPROVAL UNDER SITE PLAN APPROVAL REQUIRED. SUBJECT TO A COVENANT TO BE RECORDED HEREWITH.

DATE: _____

LEICESTER PLANNING BOARD

I CERTIFY THAT NO NOTICE OF APPEAL WAS RECEIVED DURING THE TWENTY (20) RECORDING DAYS NEXT AFTER RECEIPT AND OF NOTICE FROM THE PLANNING BOARD OF THE APPROVAL OF THIS PLAN

TOWN CLERK, TOWN OF LEICESTER

COMMONWEALTH OF MASSACHUSETTS
MICHAEL A. MALYNOWSKI
CIVIL
No. 47269
REGISTERED PROFESSIONAL ENGINEER

Digitally signed by Michael Malynowski
Date: 2022.02.06 21:17:29 -05'00'

PROFESSIONAL ENGINEER FOR
ALLEN & MAJOR ASSOCIATES, INC.

REV	DATE	DESCRIPTION
4	02-07-22	MISC. REVISIONS PER TOWN COMMENTS
3	12-14-21	MISC. REVISIONS PER TOWN COMMENTS
2	11-10-21	MISC. REVISIONS PER TOWN COMMENTS
1	10-05-21	MISC. REVISIONS PER TOWN COMMENTS

APPLICANT:

MKEP 770 LLC
265 SUNRISE HIGHWAY, SUITE 1368
ROCKVILLE CENTER, NY 11570

PROJECT:

SKYVIEW ESTATES RESIDENTIAL DEVELOPMENT

MAIN STREET
LEICESTER, MA

PROJECT NO.	2889-01	DATE:	09-17-21
SCALE:	1" = 40'	DWG. :	C2889-01_Layout & Materials
DESIGNED BY:	SM	CHECKED BY:	MAM

PREPARED BY:

ALLEN & MAJOR ASSOCIATES, INC.
civil engineering ♦ land surveying
environmental consulting ♦ landscape architecture
www.allenmajor.com
100 COMMERCE WAY, SUITE 5
WOBURN MA 01801
TEL: (781) 935-6889
FAX: (781) 935-2896

WOBURN, MA ♦ LAKEVILLE, MA ♦ MANCHESTER, NH

THIS DRAWING HAS BEEN PREPARED IN DIGITAL FORMAT. CLIENT/CLIENT'S REPRESENTATIVE OR CONSULTANTS MAY BE PROVIDED COPIES OF DRAWINGS AND SPECIFICATIONS FOR HIS/HER INFORMATION AND/OR SPECIFIC USE ON THIS PROJECT. DUE TO THE POTENTIAL THAT THE PROVIDED INFORMATION MAY BE MODIFIED UNINTENTIONALLY OR OTHERWISE, ALLEN & MAJOR ASSOCIATES, INC. MAY REMOVE ALL INDICATION OF THE DOCUMENT'S AUTHORSHIP ON THE DIGITAL MEDIA. PRINTED REPRESENTATIONS OR PORTABLE DOCUMENT FORMAT OF THE DRAWINGS AND SPECIFICATIONS ISSUED SHALL BE THE ONLY RECORD COPIES OF ALLEN & MAJOR ASSOCIATES, INC.'S WORK PRODUCT.

DRAWING TITLE:

ENLARGED SITE LAYOUT PLAN

Copyright © 2022 Allen & Major Associates, Inc.
All Rights Reserved

SHEET No.

C-101B

R:\PROJECTS\2889-01\CIVIL\DRAWINGS\CURRENT\C-2889-01_LAYOUT & MATERIALS.DWG

LEGEND

- PROP. PROPERTY LINE
- CURB
- SIDEWALK
- ADA ACCESSIBLE RAMP
- BASELINE
- SIGN
- GRAVEL ACCESS
- ZONING DISTRICT LINE

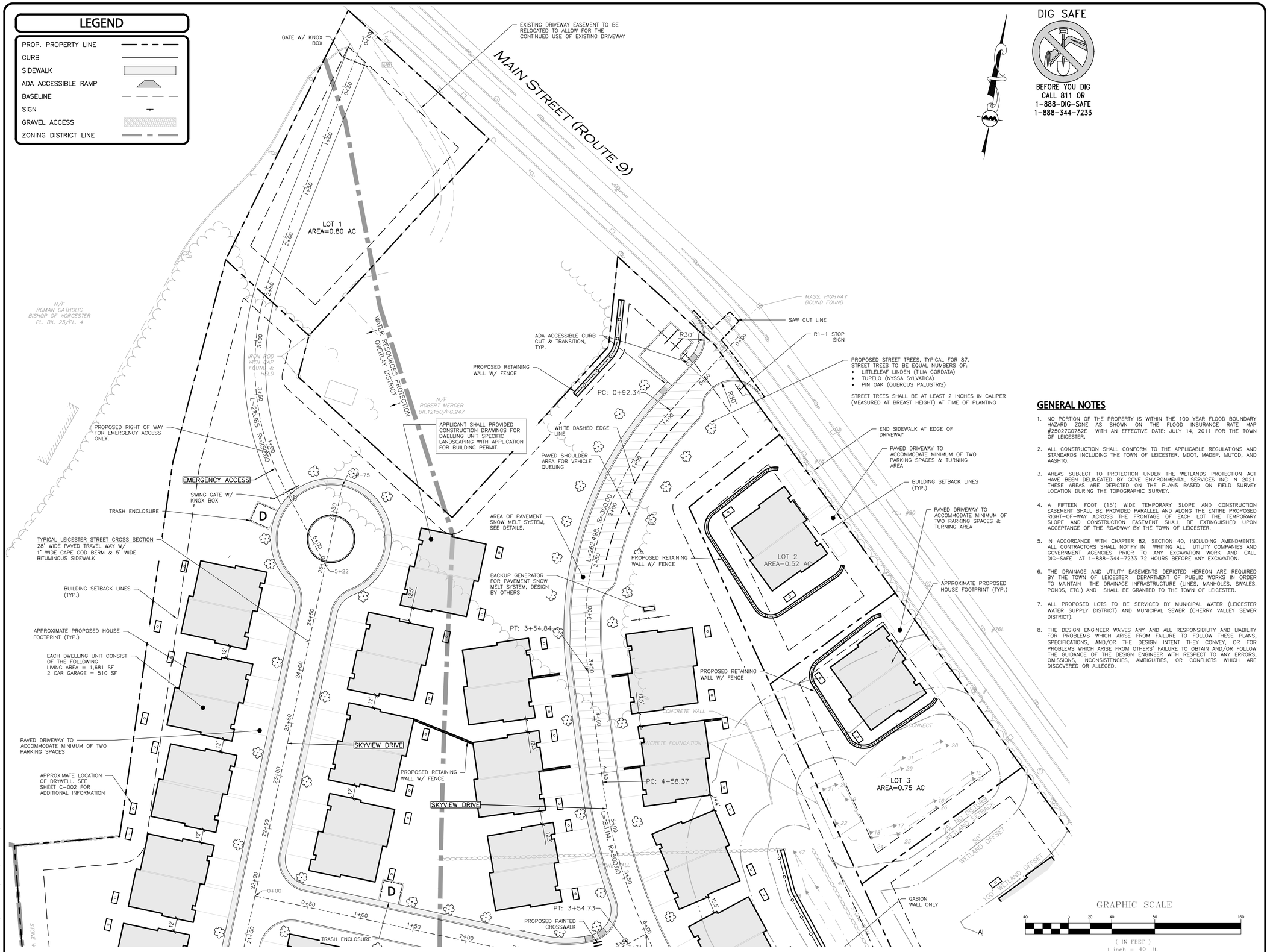

DIG SAFE

BEFORE YOU DIG
CALL 811 OR
1-888-DIG-SAFE
1-888-344-7233

GENERAL NOTES

1. NO PORTION OF THE PROPERTY IS WITHIN THE 100 YEAR FLOOD BOUNDARY HAZARD ZONE AS SHOWN ON THE FLOOD INSURANCE RATE MAP #25027C0782E WITH AN EFFECTIVE DATE: JULY 14, 2011 FOR THE TOWN OF LEICESTER.
2. ALL CONSTRUCTION SHALL CONFORM TO THE APPLICABLE REGULATIONS AND STANDARDS INCLUDING THE TOWN OF LEICESTER, MDOT, MADEP, MUTCD, AND AASHTO.
3. AREAS SUBJECT TO PROTECTION UNDER THE WETLANDS PROTECTION ACT HAVE BEEN DELINEATED BY GOVE ENVIRONMENTAL SERVICES INC IN 2021. THESE AREAS ARE DEPICTED ON THE PLANS BASED ON FIELD SURVEY LOCATION DURING THE TOPOGRAPHIC SURVEY.
4. A FIFTEEN FOOT (15') WIDE TEMPORARY SLOPE AND CONSTRUCTION EASEMENT SHALL BE PROVIDED PARALLEL AND ALONG THE ENTIRE PROPOSED RIGHT-OF-WAY ACROSS THE FRONTAGE OF EACH LOT THE TEMPORARY SLOPE AND CONSTRUCTION EASEMENT SHALL BE EXTINGUISHED UPON ACCEPTANCE OF THE ROADWAY BY THE TOWN OF LEICESTER.
5. IN ACCORDANCE WITH CHAPTER 82, SECTION 40, INCLUDING AMENDMENTS. ALL CONTRACTORS SHALL NOTIFY IN WRITING ALL UTILITY COMPANIES AND GOVERNMENT AGENCIES PRIOR TO ANY EXCAVATION WORK AND CALL DIG-SAFE AT 1-888-344-7233 72 HOURS BEFORE ANY EXCAVATION.
6. THE DRAINAGE AND UTILITY EASEMENTS DEPICTED HEREON ARE REQUIRED BY THE TOWN OF LEICESTER DEPARTMENT OF PUBLIC WORKS IN ORDER TO MAINTAIN THE DRAINAGE INFRASTRUCTURE (LINES, MANHOLES, SWALES. PONDS, ETC.) AND SHALL BE GRANTED TO THE TOWN OF LEICESTER.
7. ALL PROPOSED LOTS TO BE SERVICED BY MUNICIPAL WATER (LEICESTER WATER SUPPLY DISTRICT) AND MUNICIPAL SEWER (CHERRY VALLEY SEWER DISTRICT).
8. THE DESIGN ENGINEER WAIVES ANY AND ALL RESPONSIBILITY AND LIABILITY FOR PROBLEMS WHICH ARISE FROM FAILURE TO FOLLOW THESE PLANS, SPECIFICATIONS, AND/OR THE DESIGN INTENT THEY CONVEY, OR FOR PROBLEMS WHICH ARISE FROM OTHERS' FAILURE TO OBTAIN AND/OR FOLLOW THE GUIDANCE OF THE DESIGN ENGINEER WITH RESPECT TO ANY ERRORS, OMISSIONS, INCONSISTENCIES, AMBIGUITIES, OR CONFLICTS WHICH ARE DISCOVERED OR ALLEGED.

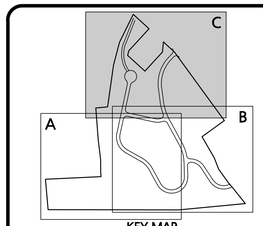

KEY MAP
NOT TO SCALE

APPROVAL UNDER SITE PLAN APPROVAL REQUIRED. SUBJECT TO A COVENANT TO BE RECORDED HEREWITH.

DATE: _____

LEICESTER PLANNING BOARD

I CERTIFY THAT NO NOTICE OF APPEAL WAS RECEIVED DURING THE TWENTY (20) RECORDING DAYS NEXT AFTER RECEIPT AND OF NOTICE FROM THE PLANNING BOARD OF THE APPROVAL OF THIS PLAN

TOWN CLERK, TOWN OF LEICESTER

COMMONWEALTH OF MASSACHUSETTS
MICHAEL A. MALYNOWSKI
CIVIL
No. 47269
REGISTERED PROFESSIONAL ENGINEER

Digitally signed by Michael Malynowski
Date: 2022.02.06 21:17:29 -05'00'

PROFESSIONAL ENGINEER FOR
ALLEN & MAJOR ASSOCIATES, INC.

REV	DATE	DESCRIPTION
4	02-07-22	MISC. REVISIONS PER TOWN COMMENTS
3	12-14-21	MISC. REVISIONS PER TOWN COMMENTS
2	11-10-21	MISC. REVISIONS PER TOWN COMMENTS
1	10-05-21	MISC. REVISIONS PER TOWN COMMENTS

APPLICANT:
MKEP 770 LLC
265 SUNRISE HIGHWAY, SUITE 1368
ROCKVILLE CENTER, NY 11570

PROJECT:
SKYVIEW ESTATES RESIDENTIAL DEVELOPMENT
MAIN STREET
LEICESTER, MA

PROJECT NO.	2889-01	DATE:	09-17-21
SCALE:	1" = 40'	DWG. :	C2889-01_Layout & Materials
DESIGNED BY:	SM	CHECKED BY:	MAM

PREPARED BY:

ALLEN & MAJOR ASSOCIATES, INC.
civil engineering ♦ land surveying
environmental consulting ♦ landscape architecture
www.allenmajor.com
100 COMMERCE WAY, SUITE 5
WOBURN MA 01801
TEL: (781) 935-6889
FAX: (781) 935-2896
WOBURN, MA ♦ LAKEVILLE, MA ♦ MANCHESTER, NH

THIS DRAWING HAS BEEN PREPARED IN DIGITAL FORMAT. CLIENT/CLIENT'S REPRESENTATIVE OR CONSULTANTS MAY BE PROVIDED COPIES OF DRAWINGS AND SPECIFICATIONS FOR HIS/HER INFORMATION AND/OR SPECIFIC USE ON THIS PROJECT. DUE TO THE POTENTIAL THAT THE PROVIDED INFORMATION MAY BE MODIFIED UNINTENTIONALLY OR OTHERWISE, ALLEN & MAJOR ASSOCIATES, INC. MAY REMOVE ALL INDICATION OF THE DOCUMENT'S AUTHORSHIP ON THE DIGITAL MEDIA. PRINTED REPRESENTATIONS OR PORTABLE DOCUMENT FORMAT OF THE DRAWINGS AND SPECIFICATIONS ISSUED SHALL BE THE ONLY RECORD COPIES OF ALLEN & MAJOR ASSOCIATES, INC.'S WORK PRODUCT.

DRAWING TITLE:
ENLARGED SITE LAYOUT PLAN

SHEET No.
C-101C

Copyright © 2022 Allen & Major Associates, Inc.
All Rights Reserved

R:\PROJECTS\2889-01\CIVIL\DRAWINGS\CURRENT\C-2889-01_LAYOUT & MATERIALS.DWG

EROSION CONTROL NOTES

1. AS THIS PROJECT SHALL ALTER OVER ONE ACRE OF LAND, IT WILL REQUIRE FILING A NOTICE OF INTENT WITH THE EPA UNDER THE NPDES PHASE II PROGRAM AND WILL REQUIRE A STORMWATER POLLUTION PREVENTION PLAN (SWPP) TO BE FILED PRIOR TO ANY LAND DISTURBANCE. THE SWPP SHALL BE PROVIDED TO THE SITE CONTRACTOR PRIOR TO CONSTRUCTION AND SHALL BE ACCESSIBLE ON SITE DURING ALL CONSTRUCTION ACTIVITY.
2. THE CONTRACTOR SHALL REVIEW AND COMPLY WITH ALL REQUIREMENTS OF THE PROJECT "ORDER OF CONDITIONS" AS ISSUED BY THE TOWN OF LEICESTER CONSERVATION COMMISSION. THE CONTRACTOR AND ALL SUB-CONTRACTORS ARE TO BE MADE AWARE OF THE ORDER OF CONDITIONS AS ISSUED BY THE LEICESTER CONSERVATION COMMISSION AND ITS REGULATIONS APPLICABLE: TO THIS PROJECT. A COPY OF THIS ORDER IS TO BE READILY AVAILABLE ON SITE AT ALL TIMES.
3. THE SEDIMENTATION AND EROSION CONTROLS DEPICTED HEREON ARE THE MINIMUM REQUIRED. THE CONTRACTOR IS RESPONSIBLE FOR THE PROPER MAINTENANCE OF ALL EROSION CONTROLS AND SHALL INSTALL ADDITIONAL MITIGATION MEASURES AS MAY BE NECESSARY TO ENSURE PROTECTION OF ALL NATURAL RESOURCES.
4. PRIOR TO THE START OF ANY CONSTRUCTION, ALL SEDIMENTATION AND EROSION CONTROL MEASURES SHALL BE INSTALLED AS DEPICTED HEREON. THE CONTRACTOR SHALL MAINTAIN THESE MEASURES UNTIL ALL WORK IS COMPLETED AND ALL AREAS HAVE BEEN STABILIZED.
5. AT NO TIME SHOULD HEAVY EQUIPMENT CROSS THE EROSION CONTROL BARRIERS OR OPERATE BEYOND THE LIMIT OF WORK DEPICTED HEREON. ALL FUELING OF CONSTRUCTION EQUIPMENT IS TO BE DONE IN THE UPLANDS OUTSIDE OF THE 100' BUFFER ZONE.
6. TEMPORARY STABILIZATION OF DISTURBED AREAS IS TO LIMIT EROSION TOWARD THE WETLAND AREAS. ALL TRENCHES ARE TO BE FILLED ON A DAILY BASIS WITH SPECIAL CARE TAKEN TO AVOID ROUTING RAINFALL THROUGH GULLIES TOWARD THE WETLAND AREAS. TEMPORARY DETENTION BASINS ARE TO BE INSTALLED IN AREAS PRONE TO CHANNEL FLOWS DURING PERIODS OF HIGH INTENSITY RAINFALL.
7. THE CONTRACTOR IS TO USE PROPER JUDGMENT RELATIVE TO CONSTRUCTION PRACTICES DURING ADVERSE WEATHER CONDITIONS OR PERIODS OF HIGH GROUNDWATER. NO WORK IS TO BE PERFORMED NEAR THE WETLAND AREAS DURING PERIODS OF HEAVY RAINFALL.
8. PERIODIC MAINTENANCE OF THE EROSION CONTROL MEASURES IS REQUIRED IN ORDER TO INSURE THE PROPER PROTECTION OF THE RESOURCE: AREAS. ALL EROSION CONTROL STRUCTURES ARE TO BE INSPECTED ON A WEEKLY BASIS OR WHENEVER THERE IS A STORM EVENT EXCEEDING ½"OF RAIN IN TWENTY FOUR HOURS.
9. THE TREE CLEARING REMOVAL LIMITS SHALL NOT EXTEND BEYOND THE SILTFENCE/HAYBALE EROSION CONTROL BARRIERS AND THE LIMIT OF WORK. AREAS OF EXISTING VEGETATION TO REMAIN ARE TO BE PROTECTED THROUGHOUT CONSTRUCTION.
10. THE BASE OF ALL STOCKPILES SHALL BE CONTAINED WITHIN THE EROSION CONTROL MEASURES LIMITS. STOCKPILES TO BE LEFT OVER 30 DAYS SHALL BE SEEDED WITH ANNUAL RYE GRASS.
11. THE FUNCTIONING OF THE TEMPORARY SEDIMENT CONTROLS OR CONSTRUCTION OPERATIONS SHALL NOT CAUSE NOTICEABLE SEDIMENT PLUMES. IF PLUMES OCCUR, THE CONTRACTOR SHALL STOP WORK AND INSTALL ADDITIONAL SEDIMENTATION CONTROLS IMMEDIATELY TO PREVENT FURTHER SEDIMENTATION.
12. THE CONTRACTOR SHALL REMOVE AND DISPOSE OF ALL ACCUMULATED SEDIMENT AS REQUIRED BY THE CONSERVATION COMMISSION OR AS DIRECTED BY THE ENGINEER.
13. AFTER THE CONSTRUCTION/INSTALLATION OF THE PERMANENT DRAINAGE /INFRASTRUCTURE, THE CONTRACTOR SHALL INSTALL AND MAINTAIN THE APPROPRIATE SEDIMENTATION CONTROLS TO PROTECT THE INTEGRITY OF THE STRUCTURES DURING THE ONGOING CONSTRUCT/ON. ALL CATCH BASINS SHALL HAVE A SILT SAC CATCH BASIN FILTER INSTALLED. THE FILTERS SHALL BE MAINTAINED AND/OR REPLACED AS NECESSARY UNTIL THE CONSTRUCTION IS COMPLETED.
14. ALL DISTURBED NON-PAVED AREAS WITHIN THE PROJECT LIMIT OF WORK SHALL BE DRESSED WITH A MINIMUM OF FOUR INCHES (4") OF SCREENED LOAM AND SHALL BE SEEDED WITH AN APPROVED GRASS MIX AND MULCHED AS SOON AS POSSIBLE IN ORDER TO INSURE THE RAPID STABILIZATION OF THE EROSION PRONE AREAS. A CONSERVATION SEED MIXTURE OF 20% ANNUAL RYEGRASS, 30% CREEPING RED FESCUE, 30% CHEWINGS FESCUE AND 20% PERENNIAL RYEGRASS IS RECOMMENDED. IF PERMANENT SEEDING CANNOT BE INSTALLED IMMEDIATELY AFTER FINAL GRADING, THE AREAS ARE TO BE TEMPORARILY MULCHED TO STABILIZE ALL SLOPES UPON COMPLETION OF WORK TO PREVENT EROSION OF SOILS INTO THE RESOURCE AREAS AND THEIR ASSOCIATED BUFFER ZONES. DURING THE GROW-IN PERIOD, TEMPORARY EROSION CONTROLS (I.E. BARK MULCH OR STRAW) IS TO BE USED TO PREVENT EROSION DURING PERIODS OF RAINFALL OR SNOW MELT. WHERE PRACTICAL DURING CONSTRUCTION, DISTURBED AREAS SHALL BE STABILIZED BY TEMPORARILY SEEDING OR MULCHING.
15. ALL DISTURBED AREAS TO BE LEFT DORMANT FOR MORE THAN 60 DAYS SHALL BE STABILIZED BY TEMPORARILY SEEDING OR MULCHING.
16. DEWATERING OPERATIONS, IF REQUIRED SHALL DISCHARGE ONTO STABILIZED AREAS AND ALL DISCHARGE WATER IS TO PASS THROUGH SEDIMENTATION CONTROL DEVICES TO PREVENT IMPACTS UPON THE WETLANDS RESOURCES, DRAINAGE SYSTEMS. AND ABUTTING PROPERTIES.
17. ALL TEMPORARY SEDIMENTATION AND EROSION CONTROL MEASURES SHALL BE REMOVED IN THEIR ENTIRETY AFTER FINAL SITE STABILIZATION AND ISSUANCE OF THE FINAL CERTIFICATE OF COMPLIANCE BY THE CONSERVATION COMMISSION.
18. THE APPLICANT JS TO NOTIFY THE LEICESTER CONSERVATION COMMISSION ONCE THE JURISDICTIONAL WORK HAS BEEN COMPLETED AND 1HE ENTIRE SITE HAS BEEN PROPERLY STABILIZED. UPON APPROVAL OF THE WORK SUBJECT TO THE ORDER OF CONDITIONS. THE APPLICANT IS TO RECEIVE A CERTIFICATE OF COMPLIANCE: THAT IS TO BE RECORDED AT THE WORCESTER REGISTRY OF DEEDS.

GRADING & DRAINAGE NOTES:

1. ALL CONSTRUCTION SHALL CONFORM TO THE APPLICABLE REGULATIONS AND STANDARDS INCLUDING THE TOWN OF LEICESTER, MDOT, MADEP, MUTCD, AND AASHTO.
2. THE CONTRACTOR IS SOLELY RESPONSIBLE FOR THE MEANS AND METHODS OF CONSTRUCTION AND FOR CONDITIONS AT THE SITE. THESE PLANS, PREPARED BY ALLEN & MAJOR ASSOCIATES DO NOT EXTEND TO OR INCLUDE SYSTEMS PERTAINING TO THE SAFETY OF THE CONSTRUCTION CONTRACTOR OR THEIR EMPLOYEES, AGENTS OR REPRESENTATIVES IN THE PERFORMANCE OF THE WORK. OR THE OWNER'S EMPLOYEES, CUSTOMERS, OR THE GENERAL PUBLIC. THE SEAL OF THE ENGINEER AS INCLUDED IN THE PLAN SET DOES NOT EXTEND TO ANY SUCH SAFETY SYSTEMS THAT MAY NOW OR HEREAFTER BE INCORPORATED INTO THESE PLANS. THE CONSTRUCTION CONTRACTOR SHALL PROVIDE THE APPROPRIATE SAFETY SYSTEMS WHICH MAY BE REQUIRED BY THE
3. ALL ELEVATIONS REFER TO NAVD 88.
4. PIPE DIMENSIONS ARE MEASURED FROM THE INSIDE FACE OF THE STRUCTURE.
5. THE INFORMATION SHOWN ON THIS PLAN IS THE SOLE PROPERTY OF ALLEN & MAJOR ASSOCIATES, INC. ITS INTENDED USE IS TO PROVIDE INFORMATION. ANY ALTERATION, MISUSE, OR RECALCULATION OF INFORMATION OR DATA WITHOUT THE EXPRESSED, WRITTEN CONSENT OF ALLEN & MAJOR ASSOCIATES, INC. IS STRICTLY PROHIBITED.
6. CONTRACTOR IS RESPONSIBLE FOR DEMOLITION OF EXISTING STRUCTURES INCLUDING REMOVAL OF ANY EXISTING UTILITIES SERVING THE STRUCTURE. UTILITIES ARE TO BE REMOVED TO THE RIGHT-OF-WAY.
7. ALL CUT OR FILL SLOPES SHALL BE 3:1 OR FLATTER UNLESS OTHERWISE NOTED.
8. EXISTING AND PROPOSED GRADE CONTOUR INTERVALS SHOWN AT 2 FOOT
9. ROOF DRAINS SHALL CONNECT TO NEAREST DRAIN STRUCTURE. REFER TO ARCHITECTURAL PLANS FOR EXACT LOCATIONS.
10. IF ANY EXISTING STRUCTURES TO REMAIN ARE DAMAGED DURING CONSTRUCTION IT SHALL BE THE CONTRACTOR'S RESPONSIBILITY TO REPAIR AND/OR REPLACE THE EXISTING STRUCTURE AS NECESSARY TO RETURN IT TO EXISTING CONDITIONS OR BETTER.
11. ALL STORM PIPE ENTERING STRUCTURES SHALL BE GROUTED TO ASSURE CONNECTION AT STRUCTURE IS WATERTIGHT.
12. ALL STORM SEWER MANHOLES IN PAVED AREAS SHALL BE FLUSH WITH PAVEMENT AND SHALL HAVE TRAFFIC BEARING RING & COVERS. MANHOLES IN UNPAVED AREAS SHALL BE 6" ABOVE FINISH GRADE. LIDS SHALL BE LABELED "DRAIN".
13. THE CONTRACTOR SHALL ADHERE TO ALL TERMS & CONDITIONS AS OUTLINED IN THE GENERAL N.P.D.E.S. PERMIT FOR STORMWATER DISCHARGE ASSOCIATED WITH CONSTRUCTION ACTIVITIES.
14. CONTRACTOR SHALL ADJUST AND/OR CUT EXISTING PAVEMENT AS NECESSARY TO ASSURE A SMOOTH FIT AND CONTINUOUS GRADE.
15. CONTRACTOR SHALL ASSURE POSITIVE DRAINAGE AWAY FROM BUILDINGS FOR ALL NATURAL AND PAVED AREAS.
16. ALL UNSURFACED AREAS DISTURBED BY GRADING OPERATION SHALL RECEIVE 4 INCHES OF TOPSOIL. CONTRACTOR SHALL APPLY STABILIZATION FABRIC TO ALL SLOPES 3H:1V OR STEEPER. CONTRACTOR SHALL GRASS DISTURBED AREAS IN ACCORDANCE WITH COUNTY SPECIFICATIONS UNTIL A HEALTHY STAND OF GRASS IS OBTAINED.
17. ALL CATCH BASINS ON-SITE SHALL BE EQUIPPED WITH HOODS AND 4 FOOT SUMPS AND SHALL CONFORM TO LOCAL DRAINAGE REQUIREMENTS.
18. A MINIMUM OF 18" VERTICAL CLEARANCE SHALL BE MAINTAINED WHERE WATER SERVICES CROSS STORM DRAIN LINES. WATER SERVICES SHALL BE ENCASED IN CONCRETE REGARDLESS OF CLEARANCE WHEN PASSING BELOW STORM DRAIN LINES. ENCASEMENT SHALL EXTEND ALONG WATER SERVICE A MINIMUM DISTANCE OF TEN FEET FROM THE CROSSING POINT OF THE OTHER PIPE AS MEASURED NORMALLY FROM ALL POINTS ALONG THE PIPE.
19. ALL DRAINAGE SHALL CONFORM TO LOCAL AND MADEP REQUIREMENTS.
20. PRIOR TO CONSTRUCTION OF IMPERVIOUS AREAS, ALL DRAINAGE STRUCTURES, PIPES AND BASINS SHALL BE INSTALLED AND INSPECTED FOR PROPER FUNCTION.
21. IT IS THE RESPONSIBILITY OF THE CONTRACTOR TO REVIEW ALL DRAWINGS AND SPECIFICATIONS ASSOCIATED WITH THE PROJECT WORK SCOPE PRIOR TO THE START OF CONSTRUCTION. SHOULD THE CONTRACTOR FIND A CONFLICT WITH THE DRAWINGS, SPECIFICATIONS, OR RELATIVE CODES, IT IS THE RESPONSIBILITY OF THE CONTRACTOR TO NOTIFY THE ENGINEER AND/OR ARCHITECT PRIOR TO START OF CONSTRUCTION. FAILURE BY THE CONTRACTOR TO NOTIFY THE ENGINEER AND/OR ARCHITECT SHALL CONSTITUTE ACCEPTANCE OF FULL RESPONSIBILITY BY THE CONTRACTOR TO COMPLETE THE SCOPE OF WORK AND/OR DESIGN INTENT OF THE DRAWINGS AND IN FULL COMPLIANCE WITH LOCAL REGULATIONS AND CODES.
22. THE DESIGN ENGINEER WAIVES ANY AND ALL RESPONSIBILITY AND LIABILITY FOR PROBLEMS WHICH ARISE FROM FAILURE TO FOLLOW THESE PLANS, SPECIFICATIONS, AND/OR THE DESIGN INTENT THEY CONVEY, OR FOR PROBLEMS WHICH ARISE FROM OTHERS' FAILURE TO OBTAIN AND/OR FOLLOW THE GUIDANCE OF THE DESIGN ENGINEER WITH RESPECT TO ANY ERRORS, OMISSIONS, INCONSISTENCIES, AMBIGUITIES, OR CONFLICTS WHICH ARE DISCOVERED OR ALLEGED.

LEGEND

DRAIN MANHOLE	
CATCH BASIN	
FLARED END SECTION	
RIPRAP OUTFALL	
DRAIN LINE	
10' CONTOUR	900
2' CONTOUR	896
DETENTION CHAMBER	
UNDERDRAIN	UD
FLOW DIRECTION	

SOIL TESTING NOTES:

1. ADDITIONAL TEST PITS SHALL BE DUG WITHIN THE FOOTPRINT OF EACH DRYWELL USED FOR STORMWATER INFILTRATION. A MINIMUM OF 2 VERTICAL FEET BELOW THE BOTTOM OF STONE ELEVATION. DURING EXCAVATION, DEPTHS TO BEDROCK AND/OR SEASONAL HIGH WATER SHALL BE OBSERVED AND RECORDED IF ENCOUNTERED. IF LEDGE, BEDROCK OR SIMILAR SUBSURFACE MATERIAL IS DISCOVERED WITHIN 2 VERTICAL FEET FROM THE DESIGNED BOTTOM STONE ELEVATION OF THE INFILTRATION SYSTEM, THE MATERIAL SHALL BE EXCAVATED AND REPLACED WITH CRUSHED STONE OF EQUAL DIAMETER THAT WILL BE USED TO CONSTRUCT THE INFILTRATION SYSTEM.
2. IN THE EVENT THE ON-SITE CONDITIONS ARE NOT CONSISTENT WITH THE MODELED INFILTRATION RATE, MODIFICATIONS TO THE SYSTEM MUST BE REVIEWED AND APPROVED BY THE TOWN'S ENGINEER AND BY THE PLANNING STAFF.

GRAPHIC SCALE

80 0 40 80 160 320

(IN FEET)
1 inch = 80 ft.

DIG SAFE

BEFORE YOU DIG
CALL 811 OR
1-888-DIG-SAFE
1-888-344-7233

R:\PROJECTS\2889-01\CIVIL\DRAWINGS\CURRENT\C-2889-01_GRADING & DRAINAGE.DWG

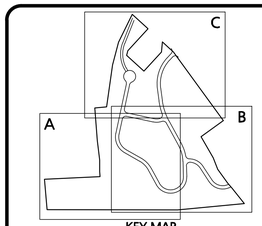

KEY MAP
NOT TO SCALE

APPROVAL UNDER SITE PLAN APPROVAL REQUIRED. SUBJECT TO A COVENANT TO BE RECORDED HEREWITH.

DATE: _____

LEICESTER PLANNING BOARD

I CERTIFY THAT NO NOTICE OF APPEAL WAS RECEIVED DURING THE TWENTY (20) RECORDING DAYS NEXT AFTER RECEIPT AND OF NOTICE FROM THE PLANNING BOARD OF THE APPROVAL OF THIS PLAN

TOWN CLERK, TOWN OF LEICESTER

COMMONWEALTH OF MASSACHUSETTS
MICHAEL A. MALYNOWSKI
CIVIL
No. 47269
REGISTERED PROFESSIONAL ENGINEER

Digitally signed by Michael Malynowski
Date: 2022.02.06 21:17:29 -05'00'

PROFESSIONAL ENGINEER FOR
ALLEN & MAJOR ASSOCIATES, INC.

REV	DATE	DESCRIPTION
4	02-07-22	MISC. REVISIONS PER TOWN COMMENTS
3	12-14-21	MISC. REVISIONS PER TOWN COMMENTS
2	11-10-21	MISC. REVISIONS PER TOWN COMMENTS
1	10-05-21	MISC. REVISIONS PER TOWN COMMENTS

APPLICANT:
MKEP 770 LLC
265 SUNRISE HIGHWAY, SUITE 1368
ROCKVILLE CENTER, NY 11570

PROJECT:
SKYVIEW ESTATES
RESIDENTIAL DEVELOPMENT
MAIN STREET
LEICESTER, MA

PROJECT NO.	2889-01	DATE:	09-17-21
SCALE:	1" = 80'	DWG. :	C2889-01_Grading & Drainage
DESIGNED BY:	SM	CHECKED BY:	MAM

PREPARED BY:

ALLEN & MAJOR ASSOCIATES, INC.
civil engineering ♦ land surveying
environmental consulting ♦ landscape architecture
www.allenmajor.com
100 COMMERCE WAY, SUITE 5
WOBURN MA 01801
TEL: (781) 935-6889
FAX: (781) 935-2896

WOBURN, MA ♦ LAKEVILLE, MA ♦ MANCHESTER, NH

THIS DRAWING HAS BEEN PREPARED IN DIGITAL FORMAT. CLIENT/CLIENT'S REPRESENTATIVE OR CONSULTANTS MAY BE PROVIDED COPIES OF DRAWINGS AND SPECIFICATIONS FOR HIS/HER INFORMATION AND/OR SPECIFIC USE ON THIS PROJECT. DUE TO THE POTENTIAL THAT THE PROVIDED INFORMATION MAY BE MODIFIED UNINTENTIONALLY OR OTHERWISE, ALLEN & MAJOR ASSOCIATES, INC. MAY REMOVE ALL INDICATION OF THE DOCUMENT'S AUTHORSHIP ON THE DIGITAL MEDIA. PRINTED REPRESENTATIONS OR PORTABLE DOCUMENT FORMAT OF THE DRAWINGS AND SPECIFICATIONS ISSUED SHALL BE THE ONLY RECORD COPIES OF ALLEN & MAJOR ASSOCIATES, INC.'S WORK PRODUCT.

DRAWING TITLE:
OVERALL GRADING & DRAINAGE PLAN

SHEET No.
C-102

Copyright © 2022 Allen & Major Associates, Inc.
All Rights Reserved

DIG SAFE

BEFORE YOU DIG
CALL 811 OR
1-888-DIG-SAFE
1-888-344-7233

LEGEND

- DRAIN MANHOLE
- CATCH BASIN
- FLARED END SECTION
- RIPRAP OUTFALL
- DRAIN LINE
- 10' CONTOUR (900)
- 2' CONTOUR (896)
- DETENTION CHAMBER
- UNDERDRAIN (UD)
- FLOW DIRECTION

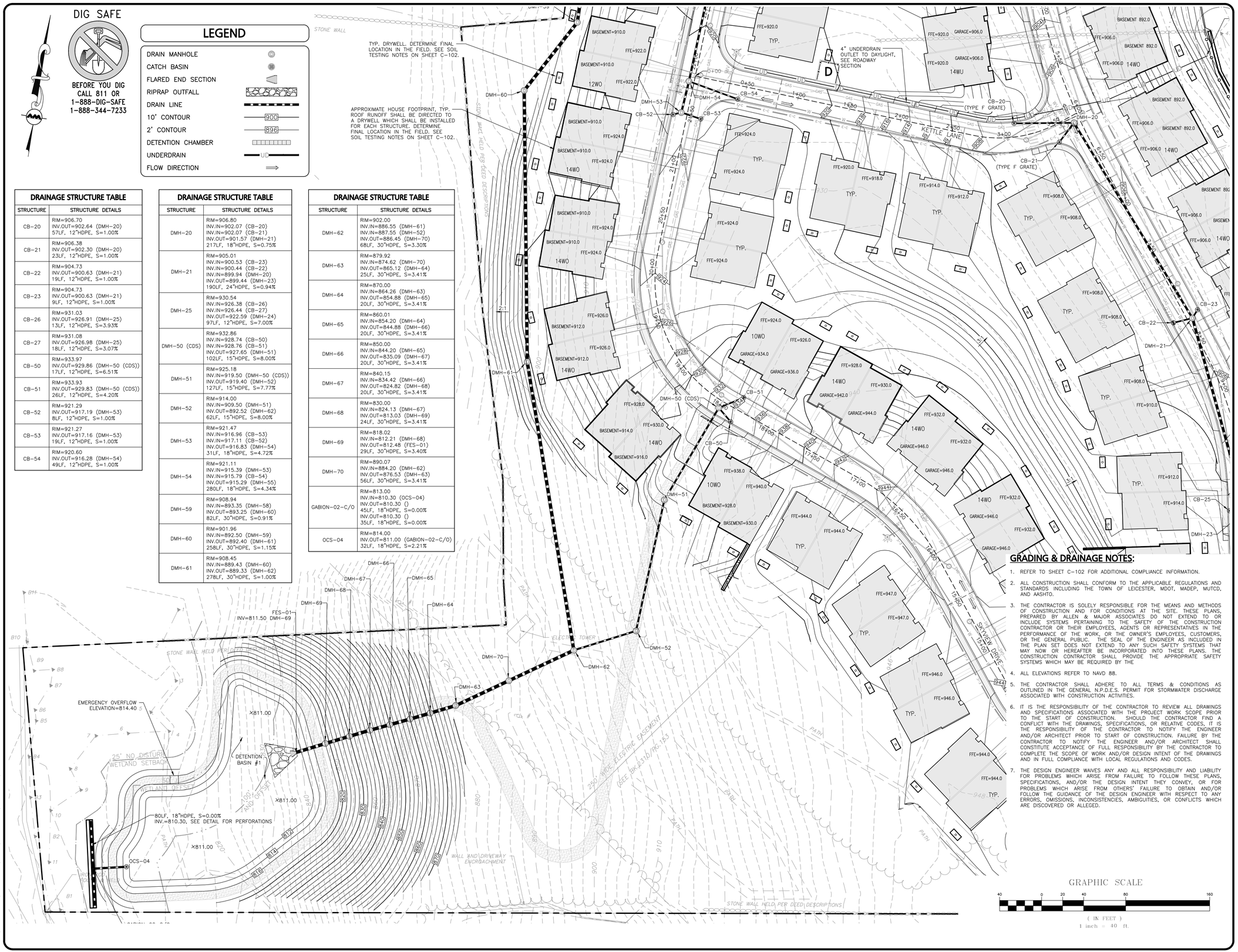

DRAINAGE STRUCTURE TABLE

STRUCTURE	STRUCTURE DETAILS
CB-20	RIM=906.70 INV.OUT=902.64 (DMH-20) 57LF, 12"HDPE, S=1.00%
CB-21	RIM=906.38 INV.OUT=902.30 (DMH-20) 23LF, 12"HDPE, S=1.00%
CB-22	RIM=904.73 INV.OUT=900.63 (DMH-21) 19LF, 12"HDPE, S=1.00%
CB-23	RIM=904.73 INV.OUT=900.63 (DMH-21) 9LF, 12"HDPE, S=1.00%
CB-26	RIM=931.03 INV.OUT=926.91 (DMH-25) 13LF, 12"HDPE, S=3.93%
CB-27	RIM=931.08 INV.OUT=926.98 (DMH-25) 18LF, 12"HDPE, S=3.07%
CB-50	RIM=933.97 INV.OUT=929.86 (DMH-50 (CDS)) 17LF, 12"HDPE, S=6.51%
CB-51	RIM=933.93 INV.OUT=929.83 (DMH-50 (CDS)) 26LF, 12"HDPE, S=4.20%
CB-52	RIM=921.29 INV.OUT=917.19 (DMH-53) 8LF, 12"HDPE, S=1.00%
CB-53	RIM=921.27 INV.OUT=917.16 (DMH-53) 19LF, 12"HDPE, S=1.00%
CB-54	RIM=920.60 INV.OUT=916.28 (DMH-54) 49LF, 12"HDPE, S=1.00%

DRAINAGE STRUCTURE TABLE

STRUCTURE	STRUCTURE DETAILS
DMH-20	RIM=906.80 INV.IN=902.07 (CB-20) INV.IN=902.07 (CB-21) INV.OUT=901.57 (DMH-21) 217LF, 18"HDPE, S=0.75%
DMH-21	RIM=905.01 INV.IN=900.53 (CB-23) INV.IN=900.44 (CB-22) INV.IN=899.94 (DMH-20) INV.OUT=899.44 (DMH-23) 190LF, 24"HDPE, S=0.94%
DMH-25	RIM=930.54 INV.IN=926.38 (CB-26) INV.IN=926.44 (CB-27) INV.OUT=922.59 (DMH-24) 97LF, 12"HDPE, S=7.00%
DMH-50 (CDS)	RIM=932.86 INV.IN=928.74 (CB-50) INV.IN=928.76 (CB-51) INV.OUT=927.65 (DMH-51) 102LF, 15"HDPE, S=8.00%
DMH-51	RIM=925.18 INV.IN=919.50 (DMH-50 (CDS)) INV.OUT=919.40 (DMH-52) 127LF, 15"HDPE, S=7.77%
DMH-52	RIM=914.00 INV.IN=909.50 (DMH-51) INV.OUT=892.52 (DMH-62) 62LF, 15"HDPE, S=8.00%
DMH-53	RIM=921.47 INV.IN=916.96 (CB-53) INV.IN=917.11 (CB-52) INV.OUT=916.83 (DMH-54) 31LF, 18"HDPE, S=4.72%
DMH-54	RIM=921.11 INV.IN=915.39 (DMH-53) INV.IN=915.79 (CB-54) INV.OUT=915.29 (DMH-55) 280LF, 18"HDPE, S=4.34%
DMH-59	RIM=908.94 INV.IN=893.35 (DMH-58) INV.OUT=893.25 (DMH-60) 82LF, 30"HDPE, S=0.91%
DMH-60	RIM=901.96 INV.IN=892.50 (DMH-59) INV.OUT=892.40 (DMH-61) 258LF, 30"HDPE, S=1.15%
DMH-61	RIM=908.45 INV.IN=889.43 (DMH-60) INV.OUT=889.33 (DMH-62) 278LF, 30"HDPE, S=1.00%

DRAINAGE STRUCTURE TABLE

STRUCTURE	STRUCTURE DETAILS
DMH-62	RIM=902.00 INV.IN=886.55 (DMH-61) INV.IN=887.55 (DMH-52) INV.OUT=886.45 (DMH-70) 68LF, 30"HDPE, S=3.30%
DMH-63	RIM=879.92 INV.IN=874.62 (DMH-70) INV.OUT=865.12 (DMH-64) 25LF, 30"HDPE, S=3.41%
DMH-64	RIM=870.00 INV.IN=864.26 (DMH-63) INV.OUT=854.88 (DMH-65) 20LF, 30"HDPE, S=3.41%
DMH-65	RIM=860.01 INV.IN=854.20 (DMH-64) INV.OUT=844.88 (DMH-66) 20LF, 30"HDPE, S=3.41%
DMH-66	RIM=850.00 INV.IN=844.20 (DMH-65) INV.OUT=835.09 (DMH-67) 20LF, 30"HDPE, S=3.41%
DMH-67	RIM=840.15 INV.IN=834.42 (DMH-66) INV.OUT=824.82 (DMH-68) 20LF, 30"HDPE, S=3.41%
DMH-68	RIM=830.00 INV.IN=824.13 (DMH-67) INV.OUT=813.03 (DMH-69) 24LF, 30"HDPE, S=3.41%
DMH-69	RIM=818.02 INV.IN=812.21 (DMH-68) INV.OUT=812.48 (FES-01) 29LF, 30"HDPE, S=3.40%
DMH-70	RIM=890.07 INV.IN=884.20 (DMH-62) INV.OUT=876.53 (DMH-63) 56LF, 30"HDPE, S=3.41%
GABION-02-C/O	RIM=813.00 INV.IN=810.30 (OCS-04) INV.OUT=810.30 () 45LF, 18"HDPE, S=0.00% INV.OUT=810.30 () 35LF, 18"HDPE, S=0.00%
OCS-04	RIM=814.00 INV.OUT=811.00 (GABION-02-C/O) 32LF, 18"HDPE, S=2.21%

GRADING & DRAINAGE NOTES:

1. REFER TO SHEET C-102 FOR ADDITIONAL COMPLIANCE INFORMATION.
2. ALL CONSTRUCTION SHALL CONFORM TO THE APPLICABLE REGULATIONS AND STANDARDS INCLUDING THE TOWN OF LEICESTER, MDOT, MADEP, MUTCD, AND AASHTO.
3. THE CONTRACTOR IS SOLELY RESPONSIBLE FOR THE MEANS AND METHODS OF CONSTRUCTION AND FOR CONDITIONS AT THE SITE. THESE PLANS, PREPARED BY ALLEN & MAJOR ASSOCIATES DO NOT EXTEND TO OR INCLUDE SYSTEMS PERTAINING TO THE SAFETY OF THE CONSTRUCTION CONTRACTOR OR THEIR EMPLOYEES, AGENTS OR REPRESENTATIVES IN THE PERFORMANCE OF THE WORK, OR THE OWNER'S EMPLOYEES, CUSTOMERS, OR THE GENERAL PUBLIC. THE SEAL OF THE ENGINEER AS INCLUDED IN THE PLAN SET DOES NOT EXTEND TO ANY SUCH SAFETY SYSTEMS THAT MAY NOW OR HEREAFTER BE INCORPORATED INTO THESE PLANS. THE CONSTRUCTION CONTRACTOR SHALL PROVIDE THE APPROPRIATE SAFETY SYSTEMS WHICH MAY BE REQUIRED BY THE
4. ALL ELEVATIONS REFER TO NAVD 88.
5. THE CONTRACTOR SHALL ADHERE TO ALL TERMS & CONDITIONS AS OUTLINED IN THE GENERAL N.P.D.E.S. PERMIT FOR STORMWATER DISCHARGE ASSOCIATED WITH CONSTRUCTION ACTIVITIES.
6. IT IS THE RESPONSIBILITY OF THE CONTRACTOR TO REVIEW ALL DRAWINGS AND SPECIFICATIONS ASSOCIATED WITH THE PROJECT WORK SCOPE PRIOR TO THE START OF CONSTRUCTION. SHOULD THE CONTRACTOR FIND A CONFLICT WITH THE DRAWINGS, SPECIFICATIONS, OR RELATIVE CODES, IT IS THE RESPONSIBILITY OF THE CONTRACTOR TO NOTIFY THE ENGINEER AND/OR ARCHITECT PRIOR TO START OF CONSTRUCTION. FAILURE BY THE CONTRACTOR TO NOTIFY THE ENGINEER AND/OR ARCHITECT SHALL CONSTITUTE ACCEPTANCE OF FULL RESPONSIBILITY BY THE CONTRACTOR TO COMPLETE THE SCOPE OF WORK AND/OR DESIGN INTENT OF THE DRAWINGS AND IN FULL COMPLIANCE WITH LOCAL REGULATIONS AND CODES.
7. THE DESIGN ENGINEER WAIVES ANY AND ALL RESPONSIBILITY AND LIABILITY FOR PROBLEMS WHICH ARISE FROM FAILURE TO FOLLOW THESE PLANS, SPECIFICATIONS, AND/OR THE DESIGN INTENT THEY CONVEY, OR FOR PROBLEMS WHICH ARISE FROM OTHERS' FAILURE TO OBTAIN AND/OR FOLLOW THE GUIDANCE OF THE DESIGN ENGINEER WITH RESPECT TO ANY ERRORS, OMISSIONS, INCONSISTENCIES, AMBIGUITIES, OR CONFLICTS WHICH ARE DISCOVERED OR ALLEGED.

R:\PROJECTS\2889-01\CIVIL\DRAWINGS\CURRENT\C-2889-01_GRADING & DRAINAGE.DWG

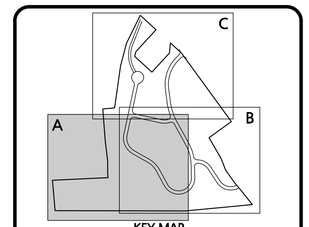

KEY MAP
NOT TO SCALE

APPROVAL UNDER SITE PLAN APPROVAL REQUIRED. SUBJECT TO A COVENANT TO BE RECORDED HEREWITH.

DATE: _____

LEICESTER PLANNING BOARD

I CERTIFY THAT NO NOTICE OF APPEAL WAS RECEIVED DURING THE TWENTY (20) RECORDING DAYS NEXT AFTER RECEIPT AND OF NOTICE FROM THE PLANNING BOARD OF THE APPROVAL OF THIS PLAN

TOWN CLERK, TOWN OF LEICESTER

COMMONWEALTH OF MASSACHUSETTS
MICHAEL A. MALYNOWSKI
CIVIL
No. 47269
REGISTERED PROFESSIONAL ENGINEER

Digitally signed by Michael Malynowski
Date: 2022.02.06 21:17:29 -05'00'

PROFESSIONAL ENGINEER FOR
ALLEN & MAJOR ASSOCIATES, INC.

REV	DATE	DESCRIPTION
4	02-07-22	MISC. REVISIONS PER TOWN COMMENTS
3	12-14-21	MISC. REVISIONS PER TOWN COMMENTS
2	11-10-21	MISC. REVISIONS PER TOWN COMMENTS
1	10-05-21	MISC. REVISIONS PER TOWN COMMENTS

APPLICANT:
MKEP 770 LLC
265 SUNRISE HIGHWAY, SUITE 1368
ROCKVILLE CENTER, NY 11570

PROJECT:
SKYVIEW ESTATES
RESIDENTIAL DEVELOPMENT
MAIN STREET
LEICESTER, MA

PROJECT NO.	2889-01	DATE:	09-17-21
SCALE:	1" = 40'	DWG. :	c2889-01_grading & drainage
DESIGNED BY:	SM	CHECKED BY:	MAM

PREPARED BY:
ALLEN & MAJOR ASSOCIATES, INC.
civil engineering ♦ land surveying
environmental consulting ♦ landscape architecture
www.allenmajor.com
100 COMMERCE WAY, SUITE 5
WOBURN MA 01801
TEL: (781) 935-6889
FAX: (781) 935-2896
WOBURN, MA ♦ LAKEVILLE, MA ♦ MANCHESTER, NH

THIS DRAWING HAS BEEN PREPARED IN DIGITAL FORMAT. CLIENT/CLIENT'S REPRESENTATIVE OR CONSULTANTS MAY BE PROVIDED COPIES OF DRAWINGS AND SPECIFICATIONS FOR HIS/HER INFORMATION AND/OR SPECIFIC USE ON THIS PROJECT. DUE TO THE POTENTIAL THAT THE PROVIDED INFORMATION MAY BE MODIFIED UNINTENTIONALLY OR OTHERWISE, ALLEN & MAJOR ASSOCIATES, INC. MAY REMOVE ALL INDICATION OF THE DOCUMENT'S AUTHORSHIP ON THE DIGITAL MEDIA. PRINTED REPRESENTATIONS OR PORTABLE DOCUMENT FORMAT OF THE DRAWINGS AND SPECIFICATIONS ISSUED SHALL BE THE ONLY RECORD COPIES OF ALLEN & MAJOR ASSOCIATES, INC.'S WORK PRODUCT.

DRAWING TITLE:
GRADING & DRAINAGE PLAN

Copyright © 2022 Allen & Major Associates, Inc.
All Rights Reserved

SHEET No.
C-102A

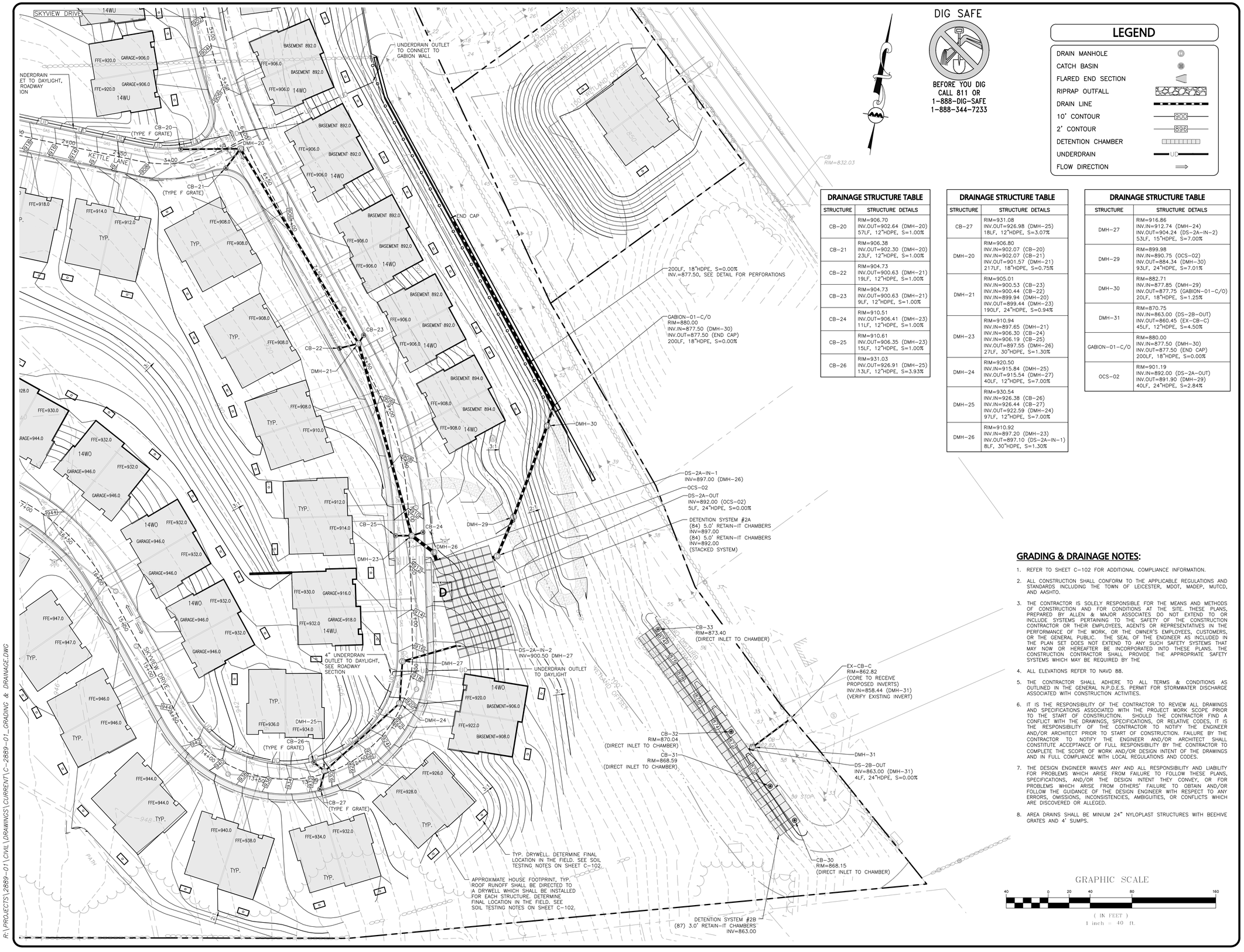

DIG SAFE

BEFORE YOU DIG
CALL 811 OR
1-888-DIG-SAFE
1-888-344-7233

LEGEND

- DRAIN MANHOLE
- CATCH BASIN
- FLARED END SECTION
- RIPRAP OUTFALL
- DRAIN LINE
- 10' CONTOUR (900)
- 2' CONTOUR (896)
- DETENTION CHAMBER
- UNDERDRAIN (UD)
- FLOW DIRECTION

DRAINAGE STRUCTURE TABLE

STRUCTURE	STRUCTURE DETAILS
CB-20	RIM=906.70 INV.OUT=902.64 (DMH-20) 57LF, 12"HDPE, S=1.00%
CB-21	RIM=906.38 INV.OUT=902.30 (DMH-20) 23LF, 12"HDPE, S=1.00%
CB-22	RIM=904.73 INV.OUT=900.63 (DMH-21) 19LF, 12"HDPE, S=1.00%
CB-23	RIM=904.73 INV.OUT=900.63 (DMH-21) 9LF, 12"HDPE, S=1.00%
CB-24	RIM=910.51 INV.OUT=906.41 (DMH-23) 11LF, 12"HDPE, S=1.00%
CB-25	RIM=910.61 INV.OUT=906.35 (DMH-23) 15LF, 12"HDPE, S=1.00%
CB-26	RIM=931.03 INV.OUT=926.91 (DMH-25) 13LF, 12"HDPE, S=3.93%

DRAINAGE STRUCTURE TABLE

STRUCTURE	STRUCTURE DETAILS
CB-27	RIM=931.08 INV.OUT=926.98 (DMH-25) 18LF, 12"HDPE, S=3.07%
DMH-20	RIM=906.80 INV.IN=902.07 (CB-20) INV.IN=902.07 (CB-21) INV.OUT=901.57 (DMH-21) 217LF, 18"HDPE, S=0.75%
DMH-21	RIM=905.01 INV.IN=900.53 (CB-23) INV.IN=900.44 (CB-22) INV.IN=899.94 (DMH-20) INV.OUT=899.44 (DMH-23) 190LF, 24"HDPE, S=0.94%
DMH-23	RIM=910.94 INV.IN=897.65 (DMH-21) INV.IN=906.30 (CB-24) INV.IN=906.19 (CB-25) INV.OUT=897.55 (DMH-26) 27LF, 30"HDPE, S=1.30%
DMH-24	RIM=920.50 INV.IN=915.84 (DMH-25) INV.OUT=915.54 (DMH-27) 40LF, 12"HDPE, S=7.00%
DMH-25	RIM=930.54 INV.IN=926.38 (CB-26) INV.IN=926.44 (CB-27) INV.OUT=922.59 (DMH-24) 97LF, 12"HDPE, S=7.00%
DMH-26	RIM=910.92 INV.IN=897.20 (DMH-23) INV.OUT=897.10 (DS-2A-IN-1) 8LF, 30"HDPE, S=1.30%

DRAINAGE STRUCTURE TABLE

STRUCTURE	STRUCTURE DETAILS
DMH-27	RIM=916.86 INV.IN=912.74 (DMH-24) INV.OUT=904.24 (DS-2A-IN-2) 53LF, 15"HDPE, S=7.00%
DMH-29	RIM=899.98 INV.IN=890.75 (OCS-02) INV.OUT=884.34 (DMH-30) 93LF, 24"HDPE, S=7.01%
DMH-30	RIM=882.71 INV.IN=877.85 (DMH-29) INV.OUT=877.75 (GABION-01-C/O) 20LF, 18"HDPE, S=1.25%
DMH-31	RIM=870.75 INV.IN=863.00 (DS-2B-OUT) INV.OUT=860.45 (EX-CB-C) 45LF, 12"HDPE, S=4.50%
GABION-01-C/O	RIM=880.00 INV.IN=877.50 (DMH-30) INV.OUT=877.50 (END CAP) 200LF, 18"HDPE, S=0.00%
OCS-02	RIM=901.19 INV.IN=892.00 (DS-2A-OUT) INV.OUT=891.90 (DMH-29) 40LF, 24"HDPE, S=2.84%

GRADING & DRAINAGE NOTES:

1. REFER TO SHEET C-102 FOR ADDITIONAL COMPLIANCE INFORMATION.
2. ALL CONSTRUCTION SHALL CONFORM TO THE APPLICABLE REGULATIONS AND STANDARDS INCLUDING THE TOWN OF LEICESTER, MDOT, MADEP, MUTCD, AND AASHTO.
3. THE CONTRACTOR IS SOLELY RESPONSIBLE FOR THE MEANS AND METHODS OF CONSTRUCTION AND FOR CONDITIONS AT THE SITE. THESE PLANS, PREPARED BY ALLEN & MAJOR ASSOCIATES DO NOT EXTEND TO OR INCLUDE SYSTEMS PERTAINING TO THE SAFETY OF THE CONSTRUCTION CONTRACTOR OR THEIR EMPLOYEES, AGENTS OR REPRESENTATIVES IN THE PERFORMANCE OF THE WORK, OR THE OWNER'S EMPLOYEES, CUSTOMERS, OR THE GENERAL PUBLIC. THE SEAL OF THE ENGINEER AS INCLUDED IN THE PLAN SET DOES NOT EXTEND TO ANY SUCH SAFETY SYSTEMS THAT MAY NOW OR HEREAFTER BE INCORPORATED INTO THESE PLANS. THE CONSTRUCTION CONTRACTOR SHALL PROVIDE THE APPROPRIATE SAFETY SYSTEMS WHICH MAY BE REQUIRED BY THE
4. ALL ELEVATIONS REFER TO NAVD 88.
5. THE CONTRACTOR SHALL ADHERE TO ALL TERMS & CONDITIONS AS OUTLINED IN THE GENERAL N.P.D.E.S. PERMIT FOR STORMWATER DISCHARGE ASSOCIATED WITH CONSTRUCTION ACTIVITIES.
6. IT IS THE RESPONSIBILITY OF THE CONTRACTOR TO REVIEW ALL DRAWINGS AND SPECIFICATIONS ASSOCIATED WITH THE PROJECT WORK SCOPE PRIOR TO THE START OF CONSTRUCTION. SHOULD THE CONTRACTOR FIND A CONFLICT WITH THE DRAWINGS, SPECIFICATIONS, OR RELATIVE CODES, IT IS THE RESPONSIBILITY OF THE CONTRACTOR TO NOTIFY THE ENGINEER AND/OR ARCHITECT PRIOR TO START OF CONSTRUCTION. FAILURE BY THE CONTRACTOR TO NOTIFY THE ENGINEER AND/OR ARCHITECT SHALL CONSTITUTE ACCEPTANCE OF FULL RESPONSIBILITY BY THE CONTRACTOR TO COMPLETE THE SCOPE OF WORK AND/OR DESIGN INTENT OF THE DRAWINGS AND IN FULL COMPLIANCE WITH LOCAL REGULATIONS AND CODES.
7. THE DESIGN ENGINEER WAIVES ANY AND ALL RESPONSIBILITY AND LIABILITY FOR PROBLEMS WHICH ARISE FROM FAILURE TO FOLLOW THESE PLANS, SPECIFICATIONS, AND/OR THE DESIGN INTENT THEY CONVEY, OR FOR PROBLEMS WHICH ARISE FROM OTHERS' FAILURE TO OBTAIN AND/OR FOLLOW THE GUIDANCE OF THE DESIGN ENGINEER WITH RESPECT TO ANY ERRORS, OMISSIONS, INCONSISTENCIES, AMBIGUITIES, OR CONFLICTS WHICH ARE DISCOVERED OR ALLEGED.
8. AREA DRAINS SHALL BE MINIUM 24" NYLOPLAST STRUCTURES WITH BEEHIVE GRATES AND 4' SUMPS.

GRAPHIC SCALE

40 0 20 40 80 160

(IN FEET)
1 inch = 40 ft.

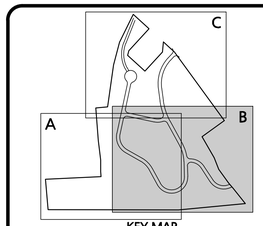

KEY MAP
NOT TO SCALE

APPROVAL UNDER SITE PLAN APPROVAL REQUIRED. SUBJECT TO A COVENANT TO BE RECORDED HEREWITH.

DATE: _____

LEICESTER PLANNING BOARD

I CERTIFY THAT NO NOTICE OF APPEAL WAS RECEIVED DURING THE TWENTY (20) RECORDING DAYS NEXT AFTER RECEIPT AND OF NOTICE FROM THE PLANNING BOARD OF THE APPROVAL OF THIS PLAN

TOWN CLERK, TOWN OF LEICESTER

COMMONWEALTH OF MASSACHUSETTS
MICHAEL A. MALYNOWSKI
CIVIL
No. 47269
REGISTERED PROFESSIONAL ENGINEER

Digitally signed by Michael Malynowski
Date: 2022.02.06 21:17:29 -05'00'

PROFESSIONAL ENGINEER FOR
ALLEN & MAJOR ASSOCIATES, INC.

REV	DATE	DESCRIPTION
4	02-07-22	MISC. REVISIONS PER TOWN COMMENTS
3	12-14-21	MISC. REVISIONS PER TOWN COMMENTS
2	11-10-21	MISC. REVISIONS PER TOWN COMMENTS
1	10-05-21	MISC. REVISIONS PER TOWN COMMENTS

APPLICANT:
MKEP 770 LLC
265 SUNRISE HIGHWAY, SUITE 1368
ROCKVILLE CENTER, NY 11570

PROJECT:
SKYVIEW ESTATES
RESIDENTIAL DEVELOPMENT
MAIN STREET
LEICESTER, MA

PROJECT NO.	2889-01	DATE:	09-17-21
SCALE:	1" = 40'	DWG. : c2889-01_grading & drainage	
DESIGNED BY:	SM	CHECKED BY:	MAM

PREPARED BY:
ALLEN & MAJOR ASSOCIATES, INC.
civil engineering ♦ land surveying
environmental consulting ♦ landscape architecture
www.allenmajor.com
100 COMMERCE WAY, SUITE 5
WOBURN MA 01801
TEL: (781) 935-6889
FAX: (781) 935-2896
WOBURN, MA ♦ LAKEVILLE, MA ♦ MANCHESTER, NH

THIS DRAWING HAS BEEN PREPARED IN DIGITAL FORMAT. CLIENT/CLIENT'S REPRESENTATIVE OR CONSULTANTS MAY BE PROVIDED COPIES OF DRAWINGS AND SPECIFICATIONS FOR HIS/HER INFORMATION AND/OR SPECIFIC USE ON THIS PROJECT. DUE TO THE POTENTIAL THAT THE PROVIDED INFORMATION MAY BE MODIFIED UNINTENTIONALLY OR OTHERWISE, ALLEN & MAJOR ASSOCIATES, INC. MAY REMOVE ALL INDICATION OF THE DOCUMENT'S AUTHORSHIP ON THE DIGITAL MEDIA. PRINTED REPRESENTATIONS OR PORTABLE DOCUMENT FORMAT OF THE DRAWINGS AND SPECIFICATIONS ISSUED SHALL BE THE ONLY RECORD COPIES OF ALLEN & MAJOR ASSOCIATES, INC.'S WORK PRODUCT.

DRAWING TITLE:
GRADING & DRAINAGE PLAN

SHEET No.
C-102B

Copyright © 2022 Allen & Major Associates, Inc.
All Rights Reserved

R:\PROJECTS\2889-01\CIVIL\DRAWINGS\CURRENT\C-2889-01_GRADING & DRAINAGE.DWG

R:\PROJECTS\2889-01\CIVIL\DRAWINGS\CURRENT\C-2889-01_GRADING & DRAINAGE.DWG

GRADING & DRAINAGE NOTES:

1. REFER TO SHEET C-102 FOR ADDITIONAL COMPLIANCE INFORMATION.
2. ALL CONSTRUCTION SHALL CONFORM TO THE APPLICABLE REGULATIONS AND STANDARDS INCLUDING THE TOWN OF LEICESTER, MDOT, MADEP, MUTCD, AND AASHTO.
3. THE CONTRACTOR IS SOLELY RESPONSIBLE FOR THE MEANS AND METHODS OF CONSTRUCTION AND FOR CONDITIONS AT THE SITE. THESE PLANS, PREPARED BY ALLEN & MAJOR ASSOCIATES DO NOT EXTEND TO OR INCLUDE SYSTEMS PERTAINING TO THE SAFETY OF THE CONSTRUCTION CONTRACTOR OR THEIR EMPLOYEES, AGENTS OR REPRESENTATIVES IN THE PERFORMANCE OF THE WORK, OR THE OWNER'S EMPLOYEES, CUSTOMERS, OR THE GENERAL PUBLIC. THE SEAL OF THE ENGINEER AS INCLUDED IN THE PLAN SET DOES NOT EXTEND TO ANY SUCH SAFETY SYSTEMS THAT MAY NOW OR HEREAFTER BE INCORPORATED INTO THESE PLANS. THE CONSTRUCTION CONTRACTOR SHALL PROVIDE THE APPROPRIATE SAFETY SYSTEMS WHICH MAY BE REQUIRED BY THE
4. ALL ELEVATIONS REFER TO NAVD 88.
5. THE CONTRACTOR SHALL ADHERE TO ALL TERMS & CONDITIONS AS OUTLINED IN THE GENERAL N.P.D.E.S. PERMIT FOR STORMWATER DISCHARGE ASSOCIATED WITH CONSTRUCTION ACTIVITIES.
6. IT IS THE RESPONSIBILITY OF THE CONTRACTOR TO REVIEW ALL DRAWINGS AND SPECIFICATIONS ASSOCIATED WITH THE PROJECT WORK SCOPE PRIOR TO THE START OF CONSTRUCTION. SHOULD THE CONTRACTOR FIND A CONFLICT WITH THE DRAWINGS, SPECIFICATIONS, OR RELATIVE CODES, IT IS THE RESPONSIBILITY OF THE CONTRACTOR TO NOTIFY THE ENGINEER AND/OR ARCHITECT PRIOR TO START OF CONSTRUCTION. FAILURE BY THE CONTRACTOR TO NOTIFY THE ENGINEER AND/OR ARCHITECT SHALL CONSTITUTE ACCEPTANCE OF FULL RESPONSIBILITY BY THE CONTRACTOR TO COMPLETE THE SCOPE OF WORK AND/OR DESIGN INTENT OF THE DRAWINGS AND IN FULL COMPLIANCE WITH LOCAL REGULATIONS AND CODES.
7. THE DESIGN ENGINEER WAIVES ANY AND ALL RESPONSIBILITY AND LIABILITY FOR PROBLEMS WHICH ARISE FROM FAILURE TO FOLLOW THESE PLANS, SPECIFICATIONS, AND/OR THE DESIGN INTENT THEY CONVEY, OR FOR PROBLEMS WHICH ARISE FROM OTHERS' FAILURE TO OBTAIN AND/OR FOLLOW THE GUIDANCE OF THE DESIGN ENGINEER WITH RESPECT TO ANY ERRORS, OMISSIONS, INCONSISTENCIES, AMBIGUITIES, OR CONFLICTS WHICH ARE DISCOVERED OR ALLEGED.

LEGEND

- DRAIN MANHOLE
- CATCH BASIN
- FLARED END SECTION
- RIPRAP OUTFALL
- DRAIN LINE
- 10' CONTOUR (900)
- 2' CONTOUR (896)
- DETENTION CHAMBER
- UNDERDRAIN (UD)
- FLOW DIRECTION

DRAINAGE STRUCTURE TABLE

STRUCTURE	STRUCTURE DETAILS
CB-01	RIM=854.81 INV.OUT=850.71 (DMH-01) 11LF, 12"HDPE, S=1.00%
CB-02	RIM=854.82 INV.OUT=849.91 (DMH-02) 13LF, 12"HDPE, S=1.01%
CB-03	RIM=854.71 INV.OUT=849.60 (DMH-02) 14LF, 12"HDPE, S=8.00%
CB-04	RIM=879.07 INV.OUT=874.97 (DMH-05) 10LF, 12"HDPE, S=3.36%
CB-05	RIM=880.00 INV.OUT=875.90 (DMH-05) 22LF, 12"HDPE, S=5.83%
CB-06	RIM=865.10 INV.OUT=860.95 (DS-1B-IN-1) 3LF, 12"HDPE, S=1.00%
CB-07	RIM=865.88 INV.OUT=861.44 (DS-1B-IN-2) 3LF, 12"HDPE, S=1.00%
CB-20	RIM=906.70 INV.OUT=902.64 (DMH-20) 57LF, 12"HDPE, S=1.00%
CB-21	RIM=906.38 INV.OUT=902.30 (DMH-20) 23LF, 12"HDPE, S=1.00%
CB-52	RIM=921.29 INV.OUT=917.19 (DMH-53) 8LF, 12"HDPE, S=1.00%
CB-53	RIM=921.27 INV.OUT=917.16 (DMH-53) 19LF, 12"HDPE, S=1.00%
CB-54	RIM=920.60 INV.OUT=916.28 (DMH-54) 49LF, 12"HDPE, S=1.00%
CB-55	RIM=907.81 INV.OUT=903.70 (DMH-55) 9LF, 12"HDPE, S=1.00%
CB-56	RIM=907.81 INV.OUT=903.70 (DMH-55) 18LF, 12"HDPE, S=1.00%
CB-57	RIM=903.04 INV.OUT=898.94 (DMH-56) 35LF, 12"HDPE, S=1.00%
CB-58	RIM=903.04 INV.OUT=898.94 (DMH-56) 64LF, 12"HDPE, S=1.00%
DMH-01	RIM=855.31 INV.IN=849.44 (DMH-02) INV.IN=850.59 (CB-01) INV.OUT=849.34 (DS-1A-IN-2) 10LF, 12"HDPE, S=1.20%
DMH-02	RIM=854.79 INV.IN=849.77 (CB-02) INV.IN=848.47 (CB-03) INV.OUT=849.67 (DMH-01) 29LF, 12"HDPE, S=0.80%
DMH-03	RIM=858.85 INV.IN=851.72 (DMH-04) INV.OUT=851.62 (DS-1A-IN-1) 9LF, 15"HDPE, S=4.22%

DRAINAGE STRUCTURE TABLE

STRUCTURE	STRUCTURE DETAILS
DMH-04	RIM=867.55 INV.IN=863.10 (DMH-05) INV.OUT=857.11 (DMH-03) 77LF, 15"HDPE, S=7.00%
DMH-05	RIM=878.74 INV.IN=874.63 (CB-04) INV.IN=874.64 (CB-05) INV.OUT=869.88 (DMH-04) 97LF, 15"HDPE, S=7.00%
DMH-07	RIM=852.65 INV.IN=845.62 (OCS-01) INV.OUT=845.52 (EX-CB-A) 13LF, 15"HDPE, S=1.50%
DMH-09	RIM=867.27 INV.IN=858.10 (OCS-05) INV.OUT=858.00 (EX-CB-B) 18LF, 12"HDPE, S=1.00%
DMH-20	RIM=906.80 INV.IN=902.07 (CB-20) INV.IN=902.07 (CB-21) INV.OUT=901.57 (DMH-21) 217LF, 18"HDPE, S=0.75%
DMH-53	RIM=921.47 INV.IN=916.96 (CB-53) INV.IN=917.11 (CB-52) INV.OUT=916.83 (DMH-54) 31LF, 18"HDPE, S=4.72%
DMH-54	RIM=921.11 INV.IN=915.39 (DMH-53) INV.IN=915.79 (CB-54) INV.OUT=915.29 (DMH-55) 280LF, 18"HDPE, S=4.34%
DMH-55	RIM=907.94 INV.IN=903.13 (DMH-54) INV.IN=903.61 (CB-55) INV.IN=903.53 (CB-56) INV.OUT=902.61 (DMH-56) 72LF, 24"HDPE, S=4.55%
DMH-56	RIM=904.55 INV.IN=898.30 (CB-58) INV.IN=899.32 (DMH-55) INV.IN=898.59 (CB-57) INV.OUT=896.80 (DMH-57 (CDS)) 20LF, 30"HDPE, S=1.00%
DMH-57 (CDS)	RIM=904.09 INV.IN=896.60 (DMH-56) INV.OUT=896.50 (DMH-58) 103LF, 30"HDPE, S=0.80%
DMH-58	RIM=899.99 INV.IN=895.68 (DMH-57 (CDS)) INV.OUT=895.58 (DMH-59) 278LF, 30"HDPE, S=0.80%
DMH-59	RIM=908.94 INV.IN=893.35 (DMH-58) INV.OUT=893.25 (DMH-60) 82LF, 30"HDPE, S=0.91%
DMH-60	RIM=901.96 INV.IN=892.50 (DMH-59) INV.OUT=892.40 (DMH-61) 258LF, 30"HDPE, S=1.15%
OCS-01	RIM=856.57 INV.IN=846.50 (DS-1A-OUT) INV.OUT=846.50 (DMH-07) 122LF, 15"HDPE, S=0.72%
OCS-05	RIM=865.64 INV.IN=859.20 (DS-1B-OUT) INV.OUT=859.10 (DMH-09) 100LF, 12"HDPE, S=1.00%

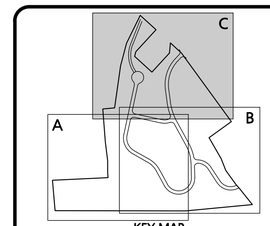

KEY MAP
NOT TO SCALE

APPROVAL UNDER SITE PLAN APPROVAL REQUIRED. SUBJECT TO A COVENANT TO BE RECORDED HEREWITH.

DATE: _____

LEICESTER PLANNING BOARD

I CERTIFY THAT NO NOTICE OF APPEAL WAS RECEIVED DURING THE TWENTY (20) RECORDING DAYS NEXT AFTER RECEIPT AND OF NOTICE FROM THE PLANNING BOARD OF THE APPROVAL OF THIS PLAN

TOWN CLERK, TOWN OF LEICESTER

COMMONWEALTH OF MASSACHUSETTS
MICHAEL A. MALYNOWSKI
CIVIL
No. 47269
REGISTERED PROFESSIONAL ENGINEER

Digitally signed by Michael Malynowski
Date: 2022.02.06 21:17:29 -05'00'

PROFESSIONAL ENGINEER FOR
ALLEN & MAJOR ASSOCIATES, INC.

REV	DATE	DESCRIPTION
4	02-07-22	MISC. REVISIONS PER TOWN COMMENTS
3	12-14-21	MISC. REVISIONS PER TOWN COMMENTS
2	11-10-21	MISC. REVISIONS PER TOWN COMMENTS
1	10-05-21	MISC. REVISIONS PER TOWN COMMENTS

APPLICANT:

MKEP 770 LLC
265 SUNRISE HIGHWAY, SUITE 1368
ROCKVILLE CENTER, NY 11570

PROJECT:

SKYVIEW ESTATES
RESIDENTIAL DEVELOPMENT
MAIN STREET
LEICESTER, MA

PROJECT NO.	2889-01	DATE:	09-17-21
SCALE:	1" = 40'	DWG. :	c2889-01_grading & drainage
DESIGNED BY:	SM	CHECKED BY:	MAM

PREPARED BY:

ALLEN & MAJOR ASSOCIATES, INC.
civil engineering ♦ land surveying
environmental consulting ♦ landscape architecture
www.allenmajor.com
100 COMMERCE WAY, SUITE 5
WOBURN MA 01801
TEL: (781) 935-6889
FAX: (781) 935-2896
WOBURN, MA ♦ LAKEVILLE, MA ♦ MANCHESTER, NH

THIS DRAWING HAS BEEN PREPARED IN DIGITAL FORMAT. CLIENT/CLIENT'S REPRESENTATIVE OR CONSULTANTS MAY BE PROVIDED COPIES OF DRAWINGS AND SPECIFICATIONS FOR HIS/HER INFORMATION AND/OR SPECIFIC USE ON THIS PROJECT. DUE TO THE POTENTIAL THAT THE PROVIDED INFORMATION MAY BE MODIFIED UNINTENTIONALLY OR OTHERWISE, ALLEN & MAJOR ASSOCIATES, INC. MAY REMOVE ALL INDICATION OF THE DOCUMENT'S AUTHORSHIP ON THE DIGITAL MEDIA. PRINTED REPRESENTATIONS OR PORTABLE DOCUMENT FORMAT OF THE DRAWINGS AND SPECIFICATIONS ISSUED SHALL BE THE ONLY RECORD COPIES OF ALLEN & MAJOR ASSOCIATES, INC.'S WORK PRODUCT.

DRAWING TITLE:

GRADING & DRAINAGE PLAN

Copyright © 2022 Allen & Major Associates, Inc.
All Rights Reserved

SHEET No.

C-102C

SOIL TESTING NOTES:

1. ADDITIONAL TEST PITS SHALL BE DUG WITHIN THE FOOTPRINT OF EACH DRYWELL USED FOR STORMWATER INFILTRATION. A MINIMUM OF 2 VERTICAL FEET BELOW THE BOTTOM OF STONE ELEVATION. DURING EXCAVATION, DEPTHS TO BEDROCK AND/OR SEASONAL HIGH WATER SHALL BE OBSERVED AND RECORDED IF ENCOUNTERED. IF LEDGE, BEDROCK OR SIMILAR SUBSURFACE MATERIAL IS DISCOVERED WITHIN 2 VERTICAL FEET FROM THE DESIGNED BOTTOM STONE ELEVATION OF THE INFILTRATION SYSTEM, THE MATERIAL SHALL BE EXCAVATED AND REPLACED WITH CRUSHED STONE OF EQUAL DIAMETER THAT WILL BE USED TO CONSTRUCT THE INFILTRATION SYSTEM.
2. IN THE EVENT THE ON-SITE CONDITIONS ARE NOT CONSISTENT WITH THE MODELED INFILTRATION RATE, MODIFICATIONS TO THE SYSTEM MUST BE REVIEWED AND APPROVED BY THE TOWN'S ENGINEER AND BY THE PLANNING STAFF.

SOIL EXCAVATION NOTE:

1. PER LEICESTER PLANNING BOARD SITE PLAN REVIEW REGULATIONS, SECTION II.F.9: PROPOSED GRADING SHOWN REQUIRES APPROXIMATELY 101,500± CUBIC YARDS OF MATERIAL TO BE MOVED.

APPROVAL UNDER SITE PLAN APPROVAL REQUIRED. SUBJECT TO A COVENANT TO BE RECORDED HEREWITH.

DATE: _____

LEICESTER PLANNING BOARD

I CERTIFY THAT NO NOTICE OF APPEAL WAS RECEIVED DURING THE TWENTY (20) RECORDING DAYS NEXT AFTER RECEIPT AND OF NOTICE FROM THE PLANNING BOARD OF THE APPROVAL OF THIS PLAN

TOWN CLERK, TOWN OF LEICESTER

COMMONWEALTH OF MASSACHUSETTS
MICHAEL A. MALYNOWSKI
CIVIL
No. 47269
REGISTERED PROFESSIONAL ENGINEER

Digitally signed by Michael Malynowski
Date: 2022.02.06 21:17:29 -05'00'

PROFESSIONAL ENGINEER FOR
ALLEN & MAJOR ASSOCIATES, INC.

REV	DATE	DESCRIPTION
4	02-07-22	MISC. REVISIONS PER TOWN COMMENTS
3	12-14-21	MISC. REVISIONS PER TOWN COMMENTS
2	11-10-21	MISC. REVISIONS PER TOWN COMMENTS
1	10-05-21	MISC. REVISIONS PER TOWN COMMENTS

APPLICANT:

MKEP 770 LLC
265 SUNRISE HIGHWAY, SUITE 1368
ROCKVILLE CENTER, NY 11570

PROJECT:

SKYVIEW ESTATES RESIDENTIAL DEVELOPMENT

MAIN STREET
LEICESTER, MA

PROJECT NO.	2889-01	DATE:	09-17-21
SCALE:	1" = 80'	DWG. : C2889-01_Grading & Drainage	
DESIGNED BY:	SM	CHECKED BY:	MAM

PREPARED BY:

ALLEN & MAJOR ASSOCIATES, INC.
civil engineering ♦ land surveying
environmental consulting ♦ landscape architecture
www.allenmajor.com
100 COMMERCE WAY, SUITE 5
WOBURN MA 01801
TEL: (781) 935-6889
FAX: (781) 935-2896
WOBURN, MA ♦ LAKEVILLE, MA ♦ MANCHESTER, NH

THIS DRAWING HAS BEEN PREPARED IN DIGITAL FORMAT. CLIENT/CLIENT'S REPRESENTATIVE OR CONSULTANTS MAY BE PROVIDED COPIES OF DRAWINGS AND SPECIFICATIONS FOR HIS/HER INFORMATION AND/OR SPECIFIC USE ON THIS PROJECT. DUE TO THE POTENTIAL THAT THE PROVIDED INFORMATION MAY BE MODIFIED UNINTENTIONALLY OR OTHERWISE, ALLEN & MAJOR ASSOCIATES, INC. MAY REMOVE ALL INDICATION OF THE DOCUMENT'S AUTHORSHIP ON THE DIGITAL MEDIA. PRINTED REPRESENTATIONS OR PORTABLE DOCUMENT FORMAT OF THE DRAWINGS AND SPECIFICATIONS ISSUED SHALL BE THE ONLY RECORD COPIES OF ALLEN & MAJOR ASSOCIATES, INC.'S WORK PRODUCT.

DRAWING TITLE:

EARTH MOVING SUMMARY PLAN

Copyright © 2022 Allen & Major Associates, Inc.
All Rights Reserved

SHEET No.

C-102D

R:\PROJECTS\2889-01\CIVIL\DRAWINGS\CURRENT\C-2889-01_GRADING & DRAINAGE.DWG

LEGEND

SEWER MANHOLE	Ⓢ
SEWER LINE	
WATER LINE	W
WATER VALVE	WV
ELEC/CABLE CONDUIT	E-C
GAS LINE	GAS
HYDRANT	
UTILILTY POLE	

DIG SAFE

BEFORE YOU DIG
CALL 811
1-888-DIG-SAFE
1-888-344-7233

UTILITY NOTES:

1. A MINIMUM OF 10 FEET CLEAR HORIZONTALLY SHALL BE MAINTAINED BETWEEN WATER MAINS AND SANITARY SEWER MAINS AND/OR STORM DRAINS. WHENEVER CONDITIONS PREVENT A LATERAL SEPARATION OF 10 FEET TO A WATER MAIN, THE WATER MAIN SHALL BE LAID IN A SEPARATE TRENCH AND THE DIFFERENCE IN ELEVATION BETWEEN THE WATER MAIN AND THE SEWER MAIN SHALL BE AT LEAST 18 INCHES.
2. IN THE CASE THAT WATER MAINS CROSS SANITARY SEWER MAINS AND ARE SEPARATED BY LESS THAT 18" OF VERTICAL CLEARANCE, THE SEWER MAIN SHALL BE ENCASED IN CONCRETE FOR THE ENTIRE WIDTH OF THE TRENCH AND FOR A DISTANCE OF 8 LINEAR FEET CENTERED ON THE CROSSING.
3. THE CONTRACTOR SHALL REFER TO ARCHITECTS PLANS AND SPECIFICATIONS FOR ACTUAL LOCATION OF ALL ROOF DRAIN LATERALS AND UTILITY ENTRANCES TO INCLUDE SANITARY SEWER LATERALS, DOMESTIC AND FIRE PROTECTION WATER SERVICE, ELECTRIC, TELEPHONE, AND GAS SERVICE. THE CONTRACTOR SHALL COORDINATE INSTALLATION OF UTILITIES IN SUCH A MANNER AS TO AVOID CONFLICTS AND COORDINATE WITH THE PROPER AGENCY THE LOCATION AND SCHEDULING OF CONNECTIONS WITH THEIR FACILITIES.
4. WHERE AN EXISTING UTILITY IS FOUND TO CONFLICT WITH THE PROPOSED WORK, THE LOCATION, ELEVATION AND SIZE OF THE UTILITY SHALL BE ACCURATELY DETERMINED WITHOUT DELAY BY THE CONTRACTOR, AND THE INFORMATION FURNISHED TO THE ENGINEER FOR RESOLUTION. THE ENGINEER WILL THEN PROVIDE RESOLUTION TO UTILITY CONFLICTS WITHOUT DELAY.
5. ALL CONSTRUCTION SHALL CONFORM TO THE APPLICABLE REGULATIONS AND STANDARDS INCLUDING THE TOWN OF LEICESTER, MADOT, MADEP, MUTCD, AND AASHTO.
6. THE CONTRACTOR IS RESPONSIBLE FOR THE MEANS AND METHODS OF CONSTRUCTION AND FOR CONDITIONS OF THE SITE. THESE PLANS PREPARED BY ALLEN & MAJOR ASSOCIATES, INC., DO NOT EXTEND TO, NOR INCLUDE SYSTEMS PERTAINING TO THE SAFETY OF THE CONSTRUCTION CONTRACTOR OR THE EMPLOYEES, AGENTS OF REPRESENTATIVES IN PERFORMANCE OF THE WORK. THE SEAL OF THE ARCHITECT OR ENGINEER HEREON DOES NOT EXTEND TO ANY SUCH SAFETY SYSTEMS THAT MAY NOW OR HEREAFTER BE INCORPORATED INTO THESE PLANS. THE CONSTRUCTION CONTRACTOR SHALL PREPARE OF OBTAIN THE APPROPRIATE SAFETY SYSTEMS THAT MAY BE REQUIRED BY THE US OCCUPATIONAL SAFETY AND HEATH ADMINISTRATION (OSHA) AND/OR LOCAL REGULATIONS.
7. ALL ELEVATIONS REFER TO NAVD 88.
8. PIPE DIMENSIONS ARE MEASURED FROM THE INSIDE FACE OF THE STRUCTURE.
9. CONTRACTOR IS RESPONSIBLE FOR DEMOLITION OF EXISTING STRUCTURES INCLUDING REMOVAL OF ANY EXISTING UTILITIES SERVING THE STRUCTURE. UTILITIES ARE TO BE REMOVED TO THE RIGHT-OF-WAY.
10. LOCATION OF PROPOSED ELECTRICAL/COMMUNICATION SERVICE IS SCHEMATIC IN NATURE AND FOR COORDINATION PURPOSES ONLY. SPECIFIC ALIGNMENTS ARE TO BE DESIGNED BY OTHERS AND REVIEWED BY THE UTILITY PROVIDING SERVICE. PROPOSED ELECTRICAL SERVICE TO BE BURIED IN ACCORDANCE WITH THE CITY OF DOVER REGULATIONS AND ELECTRIC COMPANY.
11. LOCATION OF PROPOSED GAS MAIN IS SCHEMATIC IN NATURE AND FOR COORDINATION PURPOSES ONLY. SPECIFIC ALIGNMENTS ARE TO BE DESIGNED BY OTHERS AND REVIEWED BY THE UTILITY PROVIDING SERVICE. THIS WORK TO BE INCLUDED AS PART OF BASE BID FOR SITE WORK.
12. IT IS THE RESPONSIBILITY OF THE CONTRACTOR TO REVIEW ALL DRAWINGS AND SPECIFICATIONS ASSOCIATED WITH THE PROJECT WORK SCOPE PRIOR TO THE START OF CONSTRUCTION. SHOULD THE CONTRACTOR FIND A CONFLICT WITH THE DRAWINGS, SPECIFICATIONS, OR RELATIVE CODES, IT IS THE RESPONSIBILITY OF THE CONTRACTOR TO NOTIFY THE ENGINEER AND/OR ARCHITECT PRIOR TO START OF CONSTRUCTION. FAILURE BY THE CONTRACTOR TO NOTIFY THE ENGINEER AND/OR ARCHITECT SHALL CONSTITUTE ACCEPTANCE OF FULL RESPONSIBILITY BY THE CONTRACTOR TO COMPLETE THE SCOPE OF WORK AND/OR DESIGN INTENT OF THE DRAWINGS AND IN FULL COMPLIANCE WITH LOCAL REGULATIONS AND CODES.
13. THE DESIGN ENGINEER WAIVES ANY AND ALL RESPONSIBILITY AND LIABILITY FOR PROBLEMS WHICH ARISE FROM FAILURE TO FOLLOW THESE PLANS, SPECIFICATIONS, AND/OR THE DESIGN INTENT THEY CONVEY, OR FOR PROBLEMS WHICH ARISE FROM OTHERS' FAILURE TO OBTAIN AND/OR FOLLOW THE GUIDANCE OF THE DESIGN ENGINEER WITH RESPECT TO ANY ERRORS, OMISSIONS, INCONSISTENCIES, AMBIGUITIES, OR CONFLICTS WHICH ARE DISCOVERED OR ALLEGED.

STREET/LOT LIGHTING NOTES:

1. EACH GROUPING OF HOMES SHALL BE PROVIDED WITH A STANDARD LAMP POST LIGHT ON THE LOT NEAR THE INTERSECTION OF THE DRIVEWAY WITH THE STREET RIGHT-OF-WAY LINE. THE TYPE AND INSTALLATION SHALL BE AS DIRECTED BY THE TOWN OF LEICESTER PLANNING BOARD AND IN ACCORDANCE WITH THE STATE ELECTRICAL CODES.
2. EACH HOUSE LIGHT SHALL BE PLACED ON A DUSK TO DAWN TIMER AND SHALL BE MAINTAINED BY THE INDIVIDUAL PROPERTY OWNER AND MAINTAINED IN PERPETUITY AS STATED IN THE RECORDED COVENANTS.

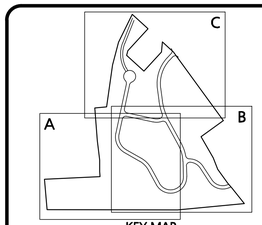

KEY MAP
NOT TO SCALE

APPROVAL UNDER SITE PLAN APPROVAL REQUIRED. SUBJECT TO A COVENANT TO BE RECORDED HEREWITH.

DATE: _____

LEICESTER PLANNING BOARD

I CERTIFY THAT NO NOTICE OF APPEAL WAS RECEIVED DURING THE TWENTY (20) RECORDING DAYS NEXT AFTER RECEIPT AND OF NOTICE FROM THE PLANNING BOARD OF THE APPROVAL OF THIS PLAN

TOWN CLERK, TOWN OF LEICESTER

COMMONWEALTH OF MASSACHUSETTS
MICHAEL A. MALYNOWSKI
CIVIL
No. 47269
REGISTERED PROFESSIONAL ENGINEER

Digitally signed by Michael Malynowski
Date: 2022.02.06 21:17:29 -05'00'

PROFESSIONAL ENGINEER FOR
ALLEN & MAJOR ASSOCIATES, INC.

REV	DATE	DESCRIPTION
4	02-07-22	MISC. REVISIONS PER TOWN COMMENTS
3	12-14-21	MISC. REVISIONS PER TOWN COMMENTS
2	11-10-21	MISC. REVISIONS PER TOWN COMMENTS
1	10-05-21	MISC. REVISIONS PER TOWN COMMENTS

APPLICANT:

MKEP 770 LLC
265 SUNRISE HIGHWAY, SUITE 1368
ROCKVILLE CENTER, NY 11570

PROJECT:

SKYVIEW ESTATES RESIDENTIAL DEVELOPMENT

MAIN STREET
LEICESTER, MA

PROJECT NO.	2889-01	DATE:	09-17-21
SCALE:	1" = 80'	DWG. : C-2889-01_Utilities	
DESIGNED BY:	SM	CHECKED BY:	MAM

PREPARED BY:

ALLEN & MAJOR ASSOCIATES, INC.
civil engineering ♦ land surveying
environmental consulting ♦ landscape architecture
www.allenmajor.com
100 COMMERCE WAY, SUITE 5
WOBURN MA 01801
TEL: (781) 935-6889
FAX: (781) 935-2896

WOBURN, MA ♦ LAKEVILLE, MA ♦ MANCHESTER, NH

THIS DRAWING HAS BEEN PREPARED IN DIGITAL FORMAT. CLIENT/CLIENT'S REPRESENTATIVE OR CONSULTANTS MAY BE PROVIDED COPIES OF DRAWINGS AND SPECIFICATIONS FOR HIS/HER INFORMATION AND/OR SPECIFIC USE ON THIS PROJECT. DUE TO THE POTENTIAL THAT THE PROVIDED INFORMATION MAY BE MODIFIED UNINTENTIONALLY OR OTHERWISE, ALLEN & MAJOR ASSOCIATES, INC. MAY REMOVE ALL INDICATION OF THE DOCUMENT'S AUTHORSHIP ON THE DIGITAL MEDIA. PRINTED REPRESENTATIONS OR PORTABLE DOCUMENT FORMAT OF THE DRAWINGS AND SPECIFICATIONS ISSUED SHALL BE THE ONLY RECORD COPIES OF ALLEN & MAJOR ASSOCIATES, INC.'S WORK PRODUCT.

DRAWING TITLE:

OVERALL UTILITIES PLAN

SHEET No.

C-103

Copyright © 2022 Allen & Major Associates, Inc.
All Rights Reserved

R:\PROJECTS\2889-01\CIVIL\DRAWINGS\CURRENT\C-2889-01_UTILITIES.DWG

DIG SAFE

BEFORE YOU DIG
CALL 811 OR
1-888-DIG-SAFE
1-888-344-7233

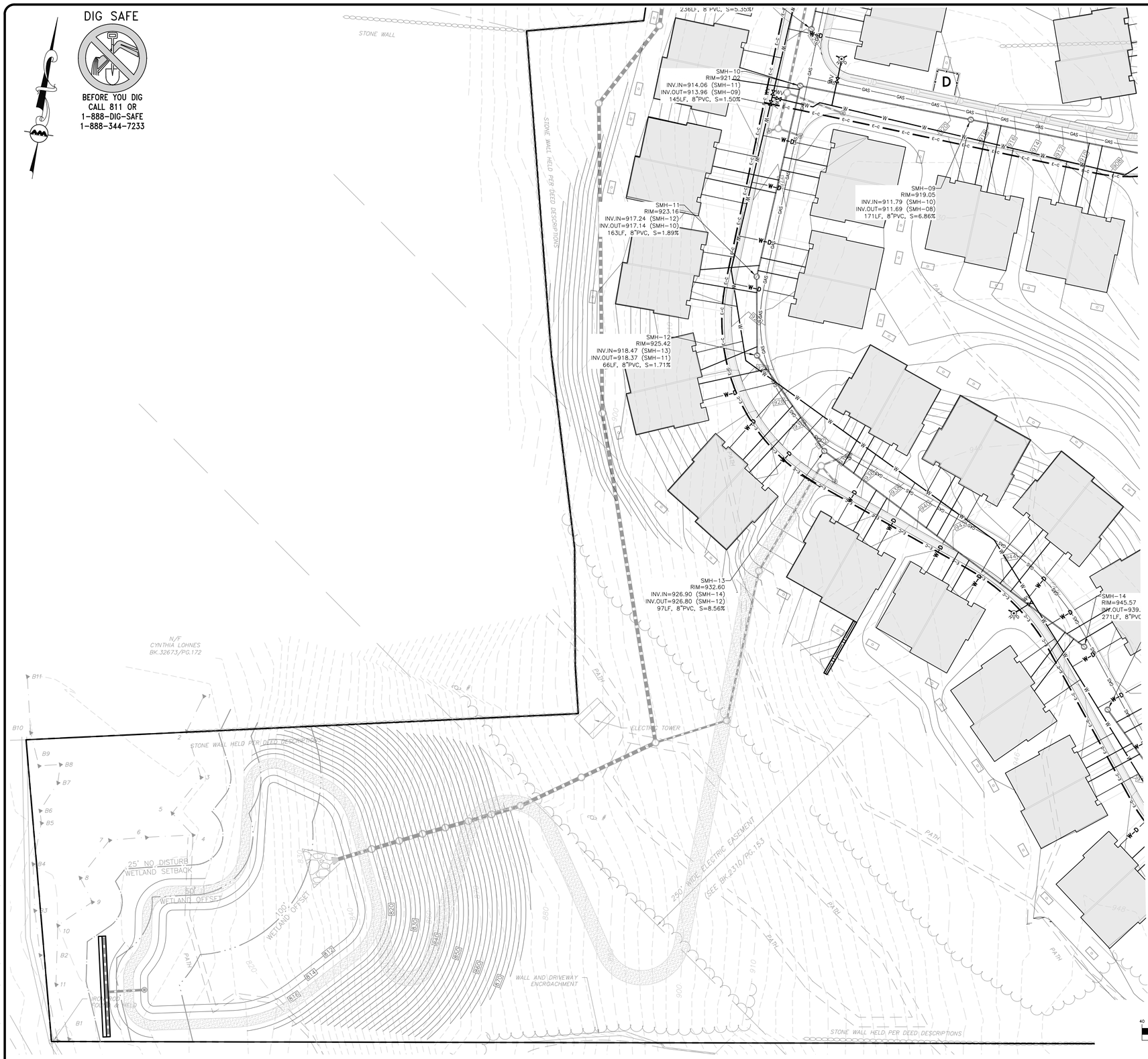

LEGEND

SEWER MANHOLE	S
SEWER LINE	
WATER LINE	W
WATER VALVE	WV
ELEC/CABLE CONDUIT	E-C
GAS LINE	GAS
HYDRANT	
UTILILTY POLE	

GENERAL PLAN NOTES:

1. REFER TO SHEET C-103 FOR ADDITIONAL COMPLIANCE INFORMATION.
2. ALL CONSTRUCTION SHALL CONFORM TO THE APPLICABLE REGULATIONS AND STANDARDS INCLUDING THE TOWN OF LEICESTER, MDOT, MADEP, MUTCD, AND AASHTO.
3. THE CONTRACTOR IS SOLELY RESPONSIBLE FOR THE MEANS AND METHODS OF CONSTRUCTION AND FOR CONDITIONS AT THE SITE. THESE PLANS, PREPARED BY ALLEN & MAJOR ASSOCIATES DO NOT EXTEND TO OR INCLUDE SYSTEMS PERTAINING TO THE SAFETY OF THE CONSTRUCTION CONTRACTOR OR THEIR EMPLOYEES, AGENTS OR REPRESENTATIVES IN THE PERFORMANCE OF THE WORK, OR THE OWNER'S EMPLOYEES, CUSTOMERS, OR THE GENERAL PUBLIC. THE SEAL OF THE ENGINEER AS INCLUDED IN THE PLAN SET DOES NOT EXTEND TO ANY SUCH SAFETY SYSTEMS THAT MAY NOW OR HEREAFTER BE INCORPORATED INTO THESE PLANS. THE CONSTRUCTION CONTRACTOR SHALL PROVIDE THE APPROPRIATE SAFETY SYSTEMS WHICH MAY BE REQUIRED BY THE
4. ALL ELEVATIONS REFER TO NAVD 88.
5. THE CONTRACTOR SHALL ADHERE TO ALL TERMS & CONDITIONS AS OUTLINED IN THE GENERAL N.P.D.E.S. PERMIT FOR STORMWATER DISCHARGE ASSOCIATED WITH CONSTRUCTION ACTIVITIES.
6. IT IS THE RESPONSIBILITY OF THE CONTRACTOR TO REVIEW ALL DRAWINGS AND SPECIFICATIONS ASSOCIATED WITH THE PROJECT WORK SCOPE PRIOR TO THE START OF CONSTRUCTION. SHOULD THE CONTRACTOR FIND A CONFLICT WITH THE DRAWINGS, SPECIFICATIONS, OR RELATIVE CODES, IT IS THE RESPONSIBILITY OF THE CONTRACTOR TO NOTIFY THE ENGINEER AND/OR ARCHITECT PRIOR TO START OF CONSTRUCTION. FAILURE BY THE CONTRACTOR TO NOTIFY THE ENGINEER AND/OR ARCHITECT SHALL CONSTITUTE ACCEPTANCE OF FULL RESPONSIBILITY BY THE CONTRACTOR TO COMPLETE THE SCOPE OF WORK AND/OR DESIGN INTENT OF THE DRAWINGS AND IN FULL COMPLIANCE WITH LOCAL REGULATIONS AND CODES.
7. THE DESIGN ENGINEER WAIVES ANY AND ALL RESPONSIBILITY AND LIABILITY FOR PROBLEMS WHICH ARISE FROM FAILURE TO FOLLOW THESE PLANS, SPECIFICATIONS, AND/OR THE DESIGN INTENT THEY CONVEY, OR FOR PROBLEMS WHICH ARISE FROM OTHERS' FAILURE TO OBTAIN AND/OR FOLLOW THE GUIDANCE OF THE DESIGN ENGINEER WITH RESPECT TO ANY ERRORS, OMISSIONS, INCONSISTENCES, AMBIGUITIES, OR CONFLICTS WHICH ARE DISCOVERED OR ALLEGED.

GRAPHIC SCALE

40 0 20 40 80 160

(IN FEET)
1 inch = 40 ft.

R:\PROJECTS\2889-01\CIVIL\DRAWINGS\CURRENT\C-2889-01_UTILITIES.DWG

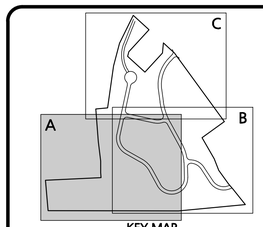

KEY MAP
NOT TO SCALE

APPROVAL UNDER SITE PLAN APPROVAL REQUIRED. SUBJECT TO A COVENANT TO BE RECORDED HEREWITH.

DATE: _____

LEICESTER PLANNING BOARD

I CERTIFY THAT NO NOTICE OF APPEAL WAS RECEIVED DURING THE TWENTY (20) RECORDING DAYS NEXT AFTER RECEIPT AND OF NOTICE FROM THE PLANNING BOARD OF THE APPROVAL OF THIS PLAN

TOWN CLERK, TOWN OF LEICESTER

COMMONWEALTH OF MASSACHUSETTS
MICHAEL A. MALYNOWSKI
CIVIL
No. 47269
REGISTERED PROFESSIONAL ENGINEER

Digitally signed by Michael Malynowski
Date: 2022.02.06 21:17:29 -05'00'

PROFESSIONAL ENGINEER FOR
ALLEN & MAJOR ASSOCIATES, INC.

REV	DATE	DESCRIPTION
4	02-07-22	MISC. REVISIONS PER TOWN COMMENTS
3	12-14-21	MISC. REVISIONS PER TOWN COMMENTS
2	11-10-21	MISC. REVISIONS PER TOWN COMMENTS
1	10-05-21	MISC. REVISIONS PER TOWN COMMENTS

APPLICANT:

MKEP 770 LLC
265 SUNRISE HIGHWAY, SUITE 1368
ROCKVILLE CENTER, NY 11570

PROJECT:

SKYVIEW ESTATES RESIDENTIAL DEVELOPMENT

MAIN STREET
LEICESTER, MA

PROJECT NO.	2889-01	DATE:	09-17-21
SCALE:	1" = 40'	DWG. :	C-2889-01_Utilities
DESIGNED BY:	SM	CHECKED BY:	MAM

PREPARED BY:

ALLEN & MAJOR ASSOCIATES, INC.
civil engineering ♦ land surveying
environmental consulting ♦ landscape architecture
www.allenmajor.com
100 COMMERCE WAY, SUITE 5
WOBURN MA 01801
TEL: (781) 935-6889
FAX: (781) 935-2896

WOBURN, MA ♦ LAKEVILLE, MA ♦ MANCHESTER, NH

THIS DRAWING HAS BEEN PREPARED IN DIGITAL FORMAT. CLIENT/CLIENT'S REPRESENTATIVE OR CONSULTANTS MAY BE PROVIDED COPIES OF DRAWINGS AND SPECIFICATIONS FOR HIS/HER INFORMATION AND/OR SPECIFIC USE ON THIS PROJECT. DUE TO THE POTENTIAL THAT THE PROVIDED INFORMATION MAY BE MODIFIED UNINTENTIONALLY OR OTHERWISE, ALLEN & MAJOR ASSOCIATES, INC. MAY REMOVE ALL INDICATION OF THE DOCUMENT'S AUTHORSHIP ON THE DIGITAL MEDIA. PRINTED REPRESENTATIONS OR PORTABLE DOCUMENT FORMAT OF THE DRAWINGS AND SPECIFICATIONS ISSUED SHALL BE THE ONLY RECORD COPIES OF ALLEN & MAJOR ASSOCIATES, INC.'S WORK PRODUCT.

DRAWING TITLE:

UTILITY PLAN

SHEET No.

C-103A

Copyright © 2022 Allen & Major Associates, Inc.
All Rights Reserved

DIG SAFE

BEFORE YOU DIG
CALL 811 OR
1-888-DIG-SAFE
1-888-344-7233

LEGEND

SEWER MANHOLE	S
SEWER LINE	
WATER LINE	W
WATER VALVE	WV
ELEC/CABLE CONDUIT	E-C
GAS LINE	GAS
HYDRANT	
UTILILTY POLE	

GENERAL PLAN NOTES:

1. REFER TO SHEET C-103 FOR ADDITIONAL COMPLIANCE INFORMATION.
2. ALL CONSTRUCTION SHALL CONFORM TO THE APPLICABLE REGULATIONS AND STANDARDS INCLUDING THE TOWN OF LEICESTER, MDOT, MADEP, MUTCD, AND AASHTO.
3. THE CONTRACTOR IS SOLELY RESPONSIBLE FOR THE MEANS AND METHODS OF CONSTRUCTION AND FOR CONDITIONS AT THE SITE. THESE PLANS, PREPARED BY ALLEN & MAJOR ASSOCIATES DO NOT EXTEND TO OR INCLUDE SYSTEMS PERTAINING TO THE SAFETY OF THE CONSTRUCTION CONTRACTOR OR THEIR EMPLOYEES, AGENTS OR REPRESENTATIVES IN THE PERFORMANCE OF THE WORK, OR THE OWNER'S EMPLOYEES, CUSTOMERS, OR THE GENERAL PUBLIC. THE SEAL OF THE ENGINEER AS INCLUDED IN THE PLAN SET DOES NOT EXTEND TO ANY SUCH SAFETY SYSTEMS THAT MAY NOW OR HEREAFTER BE INCORPORATED INTO THESE PLANS. THE CONSTRUCTION CONTRACTOR SHALL PROVIDE THE APPROPRIATE SAFETY SYSTEMS WHICH MAY BE REQUIRED BY THE
4. ALL ELEVATIONS REFER TO NAVD 88.
5. THE CONTRACTOR SHALL ADHERE TO ALL TERMS & CONDITIONS AS OUTLINED IN THE GENERAL N.P.D.E.S. PERMIT FOR STORMWATER DISCHARGE ASSOCIATED WITH CONSTRUCTION ACTIVITIES.
6. IT IS THE RESPONSIBILITY OF THE CONTRACTOR TO REVIEW ALL DRAWINGS AND SPECIFICATIONS ASSOCIATED WITH THE PROJECT WORK SCOPE PRIOR TO THE START OF CONSTRUCTION. SHOULD THE CONTRACTOR FIND A CONFLICT WITH THE DRAWINGS, SPECIFICATIONS, OR RELATIVE CODES, IT IS THE RESPONSIBILITY OF THE CONTRACTOR TO NOTIFY THE ENGINEER AND/OR ARCHITECT PRIOR TO START OF CONSTRUCTION. FAILURE BY THE CONTRACTOR TO NOTIFY THE ENGINEER AND/OR ARCHITECT SHALL CONSTITUTE ACCEPTANCE OF FULL RESPONSIBILITY BY THE CONTRACTOR TO COMPLETE THE SCOPE OF WORK AND/OR DESIGN INTENT OF THE DRAWINGS AND IN FULL COMPLIANCE WITH LOCAL REGULATIONS AND CODES.
7. THE DESIGN ENGINEER WAIVES ANY AND ALL RESPONSIBILITY AND LIABILITY FOR PROBLEMS WHICH ARISE FROM FAILURE TO FOLLOW THESE PLANS, SPECIFICATIONS, AND/OR THE DESIGN INTENT THEY CONVEY, OR FOR PROBLEMS WHICH ARISE FROM OTHERS' FAILURE TO OBTAIN AND/OR FOLLOW THE GUIDANCE OF THE DESIGN ENGINEER WITH RESPECT TO ANY ERRORS, OMISSIONS, INCONSISTENCES, AMBIGUITIES, OR CONFLICTS WHICH ARE DISCOVERED OR ALLEGED.

GRAPHIC SCALE

40 0 20 40 80 160

(IN FEET)
1 inch = 40 ft.

R:\PROJECTS\2889-01\CIVIL\DRAWINGS\CURRENT\C-2889-01_UTILITIES.DWG

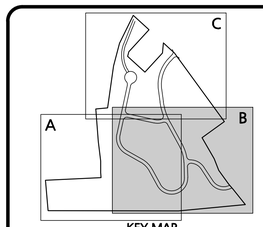

KEY MAP
NOT TO SCALE

APPROVAL UNDER SITE PLAN APPROVAL REQUIRED. SUBJECT TO A COVENANT TO BE RECORDED HEREWITH.

DATE: _____

LEICESTER PLANNING BOARD

I CERTIFY THAT NO NOTICE OF APPEAL WAS RECEIVED DURING THE TWENTY (20) RECORDING DAYS NEXT AFTER RECEIPT AND OF NOTICE FROM THE PLANNING BOARD OF THE APPROVAL OF THIS PLAN

TOWN CLERK, TOWN OF LEICESTER

COMMONWEALTH OF MASSACHUSETTS
MICHAEL A. MALYNOWSKI
CIVIL
No. 47269
REGISTERED PROFESSIONAL ENGINEER

Digitally signed by Michael Malynowski
Date: 2022.02.06 21:17:29 -05'00'

PROFESSIONAL ENGINEER FOR
ALLEN & MAJOR ASSOCIATES, INC.

REV	DATE	DESCRIPTION
4	02-07-22	MISC. REVISIONS PER TOWN COMMENTS
3	12-14-21	MISC. REVISIONS PER TOWN COMMENTS
2	11-10-21	MISC. REVISIONS PER TOWN COMMENTS
1	10-05-21	MISC. REVISIONS PER TOWN COMMENTS

APPLICANT:

MKEP 770 LLC
265 SUNRISE HIGHWAY, SUITE 1368
ROCKVILLE CENTER, NY 11570

PROJECT:

SKYVIEW ESTATES RESIDENTIAL DEVELOPMENT

MAIN STREET
LEICESTER, MA

PROJECT NO.	2889-01	DATE:	09-17-21
SCALE:	1" = 40'	DWG. :	C-2889-01_Utilities
DESIGNED BY:	SM	CHECKED BY:	MAM

PREPARED BY:

ALLEN & MAJOR ASSOCIATES, INC.
civil engineering ♦ land surveying
environmental consulting ♦ landscape architecture
www.allenmajor.com
100 COMMERCE WAY, SUITE 5
WOBURN MA 01801
TEL: (781) 935-6889
FAX: (781) 935-2896

WOBURN, MA ♦ LAKEVILLE, MA ♦ MANCHESTER, NH

THIS DRAWING HAS BEEN PREPARED IN DIGITAL FORMAT. CLIENT/CLIENT'S REPRESENTATIVE OR CONSULTANTS MAY BE PROVIDED COPIES OF DRAWINGS AND SPECIFICATIONS FOR HIS/HER INFORMATION AND/OR SPECIFIC USE ON THIS PROJECT. DUE TO THE POTENTIAL THAT THE PROVIDED INFORMATION MAY BE MODIFIED UNINTENTIONALLY OR OTHERWISE, ALLEN & MAJOR ASSOCIATES, INC. MAY REMOVE ALL INDICATION OF THE DOCUMENTS AUTHORSHIP ON THE DIGITAL MEDIA. PRINTED REPRESENTATIONS OR PORTABLE DOCUMENT FORMAT OF THE DRAWINGS AND SPECIFICATIONS ISSUED SHALL BE THE ONLY RECORD COPIES OF ALLEN & MAJOR ASSOCIATES, INC.'S WORK PRODUCT.

DRAWING TITLE: UTILITY PLAN

SHEET No. C-103B

Copyright © 2022 Allen & Major Associates, Inc.
All Rights Reserved

DIG SAFE

BEFORE YOU DIG
CALL 811 OR
1-888-DIG-SAFE
1-888-344-7233

LEGEND

SEWER MANHOLE	S
SEWER LINE	
WATER LINE	W
WATER VALVE	WV
ELEC/CABLE CONDUIT	E-C
GAS LINE	GAS
HYDRANT	
UTILILTY POLE	

GENERAL PLAN NOTES:

1. REFER TO SHEET C-103 FOR ADDITIONAL COMPLIANCE INFORMATION.
2. ALL CONSTRUCTION SHALL CONFORM TO THE APPLICABLE REGULATIONS AND STANDARDS INCLUDING THE TOWN OF LEICESTER, MDOT, MADEP, MUTCD, AND AASHTO.
3. THE CONTRACTOR IS SOLELY RESPONSIBLE FOR THE MEANS AND METHODS OF CONSTRUCTION AND FOR CONDITIONS AT THE SITE. THESE PLANS, PREPARED BY ALLEN & MAJOR ASSOCIATES DO NOT EXTEND TO OR INCLUDE SYSTEMS PERTAINING TO THE SAFETY OF THE CONSTRUCTION CONTRACTOR OR THEIR EMPLOYEES, AGENTS OR REPRESENTATIVES IN THE PERFORMANCE OF THE WORK, OR THE OWNER'S EMPLOYEES, CUSTOMERS, OR THE GENERAL PUBLIC. THE SEAL OF THE ENGINEER AS INCLUDED IN THE PLAN SET DOES NOT EXTEND TO ANY SUCH SAFETY SYSTEMS THAT MAY NOW OR HEREAFTER BE INCORPORATED INTO THESE PLANS. THE CONSTRUCTION CONTRACTOR SHALL PROVIDE THE APPROPRIATE SAFETY SYSTEMS WHICH MAY BE REQUIRED BY THE
4. ALL ELEVATIONS REFER TO NAVD 88.
5. THE CONTRACTOR SHALL ADHERE TO ALL TERMS & CONDITIONS AS OUTLINED IN THE GENERAL N.P.D.E.S. PERMIT FOR STORMWATER DISCHARGE ASSOCIATED WITH CONSTRUCTION ACTIVITIES.
6. IT IS THE RESPONSIBILITY OF THE CONTRACTOR TO REVIEW ALL DRAWINGS AND SPECIFICATIONS ASSOCIATED WITH THE PROJECT WORK SCOPE PRIOR TO THE START OF CONSTRUCTION. SHOULD THE CONTRACTOR FIND A CONFLICT WITH THE DRAWINGS, SPECIFICATIONS, OR RELATIVE CODES, IT IS THE RESPONSIBILITY OF THE CONTRACTOR TO NOTIFY THE ENGINEER AND/OR ARCHITECT PRIOR TO START OF CONSTRUCTION. FAILURE BY THE CONTRACTOR TO NOTIFY THE ENGINEER AND/OR ARCHITECT SHALL CONSTITUTE ACCEPTANCE OF FULL RESPONSIBILITY BY THE CONTRACTOR TO COMPLETE THE SCOPE OF WORK AND/OR DESIGN INTENT OF THE DRAWINGS AND IN FULL COMPLIANCE WITH LOCAL REGULATIONS AND CODES.
7. THE DESIGN ENGINEER WAIVES ANY AND ALL RESPONSIBILITY AND LIABILITY FOR PROBLEMS WHICH ARISE FROM FAILURE TO FOLLOW THESE PLANS, SPECIFICATIONS, AND/OR THE DESIGN INTENT THEY CONVEY, OR FOR PROBLEMS WHICH ARISE FROM OTHERS' FAILURE TO OBTAIN AND/OR FOLLOW THE GUIDANCE OF THE DESIGN ENGINEER WITH RESPECT TO ANY ERRORS, OMISSIONS, INCONSISTENCES, AMBIGUITIES, OR CONFLICTS WHICH ARE DISCOVERED OR ALLEGED.

GRAPHIC SCALE

40 0 20 40 80 160

(IN FEET)
1 inch = 40 ft.

R:\PROJECTS\2889-01\CIVIL\DRAWINGS\CURRENT\C-2889-01_UTILITIES.DWG

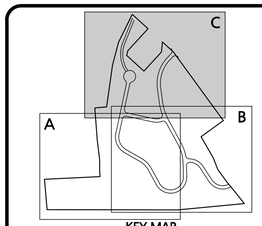

KEY MAP
NOT TO SCALE

APPROVAL UNDER SITE PLAN APPROVAL REQUIRED. SUBJECT TO A COVENANT TO BE RECORDED HEREWITH.

DATE: _____

LEICESTER PLANNING BOARD

I CERTIFY THAT NO NOTICE OF APPEAL WAS RECEIVED DURING THE TWENTY (20) RECORDING DAYS NEXT AFTER RECEIPT AND OF NOTICE FROM THE PLANNING BOARD OF THE APPROVAL OF THIS PLAN

TOWN CLERK, TOWN OF LEICESTER

COMMONWEALTH OF MASSACHUSETTS
MICHAEL A. MALYNOWSKI
CIVIL
No. 47269
REGISTERED PROFESSIONAL ENGINEER

Digitally signed by Michael Malynowski
Date: 2022.02.06 21:17:29 -05'00'

PROFESSIONAL ENGINEER FOR
ALLEN & MAJOR ASSOCIATES, INC.

REV	DATE	DESCRIPTION
4	02-07-22	MISC. REVISIONS PER TOWN COMMENTS
3	12-14-21	MISC. REVISIONS PER TOWN COMMENTS
2	11-10-21	MISC. REVISIONS PER TOWN COMMENTS
1	10-05-21	MISC. REVISIONS PER TOWN COMMENTS

APPLICANT:

MKEP 770 LLC
265 SUNRISE HIGHWAY, SUITE 1368
ROCKVILLE CENTER, NY 11570

PROJECT:

SKYVIEW ESTATES RESIDENTIAL DEVELOPMENT

MAIN STREET
LEICESTER, MA

PROJECT NO.	2889-01	DATE:	09-17-21
SCALE:	1" = 40'	DWG. :	C-2889-01_Utilities
DESIGNED BY:	SM	CHECKED BY:	MAM

PREPARED BY:

ALLEN & MAJOR ASSOCIATES, INC.
civil engineering ♦ land surveying
environmental consulting ♦ landscape architecture
www.allenmajor.com
100 COMMERCE WAY, SUITE 5
WOBURN MA 01801
TEL: (781) 935-6889
FAX: (781) 935-2896

WOBURN, MA ♦ LAKEVILLE, MA ♦ MANCHESTER, NH

THIS DRAWING HAS BEEN PREPARED IN DIGITAL FORMAT. CLIENT/CLIENT'S REPRESENTATIVE OR CONSULTANTS MAY BE PROVIDED COPIES OF DRAWINGS AND SPECIFICATIONS FOR HIS/HER INFORMATION AND/OR SPECIFIC USE ON THIS PROJECT. DUE TO THE POTENTIAL THAT THE PROVIDED INFORMATION MAY BE MODIFIED UNINTENTIONALLY OR OTHERWISE, ALLEN & MAJOR ASSOCIATES, INC. MAY REMOVE ALL INDICATION OF THE DOCUMENT'S AUTHORSHIP ON THE DIGITAL MEDIA. PRINTED REPRESENTATIONS OR PORTABLE DOCUMENT FORMAT OF THE DRAWINGS AND SPECIFICATIONS ISSUED SHALL BE THE ONLY RECORD COPIES OF ALLEN & MAJOR ASSOCIATES, INC.'S WORK PRODUCT.

DRAWING TITLE:

UTILITY PLAN

SHEET No.

C-103C

Copyright © 2022 Allen & Major Associates, Inc.
All Rights Reserved

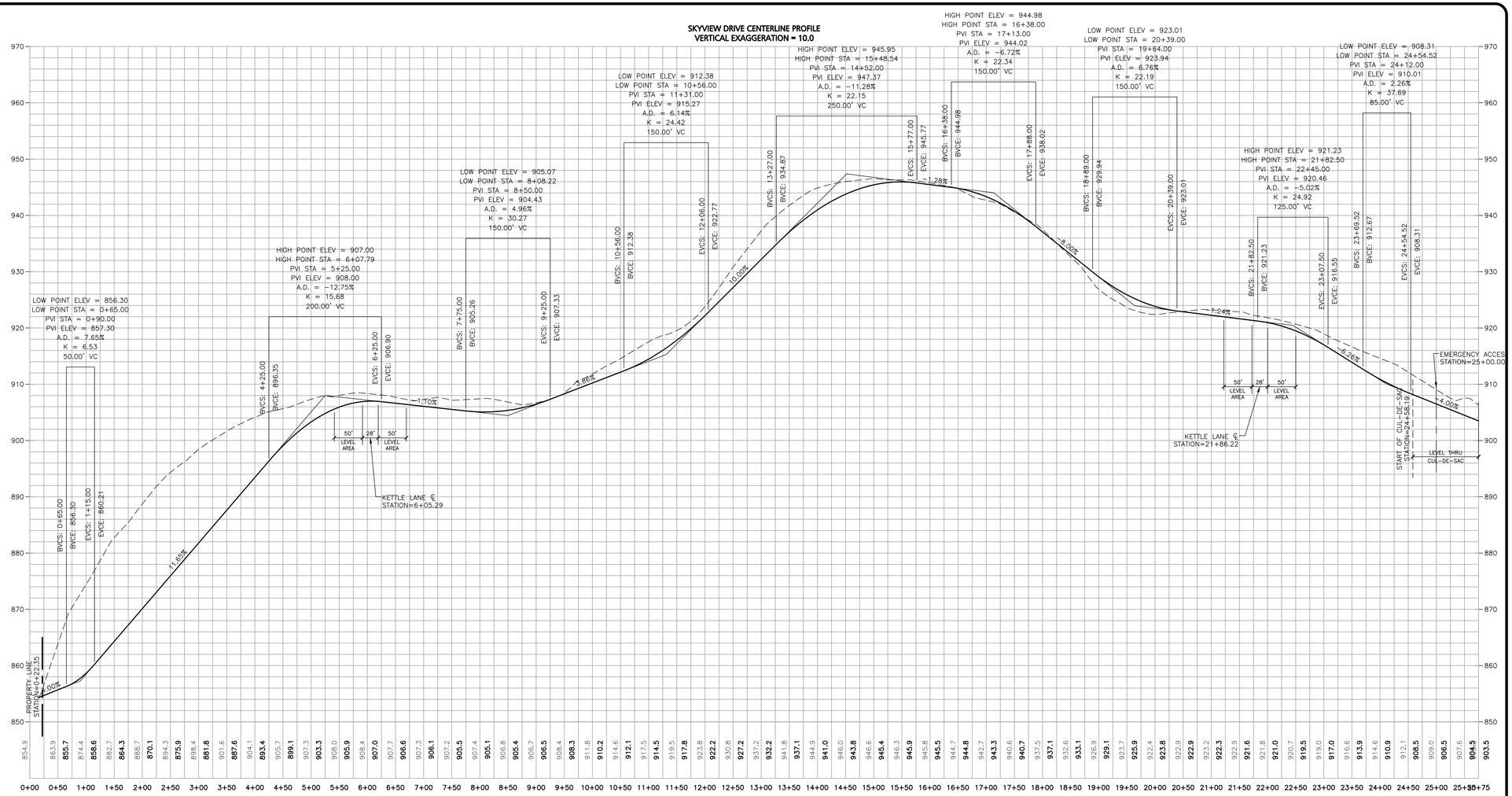

GENERAL NOTES

1. REFER TO SHEET C-102 FOR ADDITIONAL INFORMATION
2. ALL CONSTRUCTION SHALL CONFORM TO THE APPLICABLE REGULATIONS AND STANDARDS INCLUDING THE TOWN OF LEICESTER, MDOT, MADEP, MUTCD, AND AASHTO.
3. ANY DAMAGE TO PRIVATE OR PUBLIC PROPERTIES DUE TO THE CONTRACTOR'S ACTIVITIES SHALL BE REPAIRED AND RESTORED BY THE CONTRACTOR AT THEIR OWN EXPENSE.
4. THE ENGINEER SHALL BE NOTIFIED IN WRITING OF ANY UTILITIES INTERFERING WITH THE PROPOSED CONSTRUCTION AND APPROPRIATE REMEDIAL ACTION TAKEN BEFORE PROCEEDING WITH THE WORK. IT SHALL BE THE RESPONSIBILITY OF THE CONTRACTOR TO RELOCATE ALL EXISTING UTILITIES WHICH CONFLICT WITH THE PROPOSED IMPROVEMENTS SHOWN ON THE PLANS
5. THE INFORMATION SHOWN ON THIS PLAN IS THE SOLE PROPERTY OF ALLEN & MAJOR ASSOCIATES, INC. ITS INTENDED USE IS TO PROVIDE INFORMATION. ANY ALTERATION, MISUSE, OR RECALCULATION OF INFORMATION OR DATA WITHOUT THE EXPRESSED , WRITTEN CONSENT OF ALLEN & MAJOR ASSOCIATES, INC. IS STRICTLY PROHIBITED.
6. THE CONTRACTOR IS RESPONSIBLE FOR THE MEANS AND METHODS OF CONSTRUCTION AND FOR CONDITIONS OF THE SITE. THESE PLANS PREPARED BY ALLEN & MAJOR ASSOCIATES, INC., DO NOT EXTEND TO, NOR INCLUDE SYSTEMS PERTAINING TO THE SAFETY OF THE CONSTRUCTION CONTRACTOR OR THE EMPLOYEES, AGENTS OF REPRESENTATIVES IN PERFORMANCE OF THE WORK. THE SEAL OF THE ARCHITECT OR ENGINEER HEREON DOES NOT EXTEND TO ANY SUCH SAFETY SYSTEMS THAT MAY NOW OR HEREAFTER BE INCORPORATED INTO THESE PLANS. THE CONSTRUCTION CONTRACTOR SHALL PREPARE OF OBTAIN THE APPROPRIATE SAFETY SYSTEMS THAT MAY BE REQUIRED BY THE US OCCUPATIONAL SAFETY AND HEATH ADMINISTRATION (OSHA) AND/OR LOCAL REGULATIONS.
7. IT IS THE RESPONSIBILITY OF THE CONTRACTOR TO REVIEW ALL DRAWINGS AND SPECIFICATIONS ASSOCIATED WITH THE PROJECT WORK SCOPE PRIOR TO THE START OF CONSTRUCTION. SHOULD THE CONTRACTOR FIND A CONFLICT WITH THE DRAWINGS, SPECIFICATIONS, OR RELATIVE CODES, IT IS THE RESPONSIBILITY OF THE CONTRACTOR TO NOTIFY THE ENGINEER AND/OR ARCHITECT PRIOR TO START OF CONSTRUCTION. FAILURE BY THE CONTRACTOR TO NOTIFY THE ENGINEER AND/OR ARCHITECT SHALL CONSTITUTE ACCEPTANCE OF FULL RESPONSIBILITY BY THE CONTRACTOR TO COMPLETE THE SCOPE OF WORK AND/OR DESIGN INTENT OF THE DRAWINGS AND IN FULL COMPLIANCE WITH LOCAL REGULATIONS AND CODES.
8. THE DESIGN ENGINEER WAIVES ANY AND ALL RESPONSIBILITY AND LIABILITY FOR PROBLEMS WHICH ARISE FROM FAILURE TO FOLLOW THESE PLANS, SPECIFICATIONS, AND/OR THE DESIGN INTENT THEY CONVEY, OR FOR PROBLEMS WHICH ARISE FROM OTHERS' FAILURE TO OBTAIN AND/OR FOLLOW THE GUIDANCE OF THE DESIGN ENGINEER WITH RESPECT TO ANY ERRORS, OMISSIONS, INCONSISTENCIES, AMBIGUITIES, OR CONFLICTS WHICH ARE DISCOVERED OR ALLEGED.

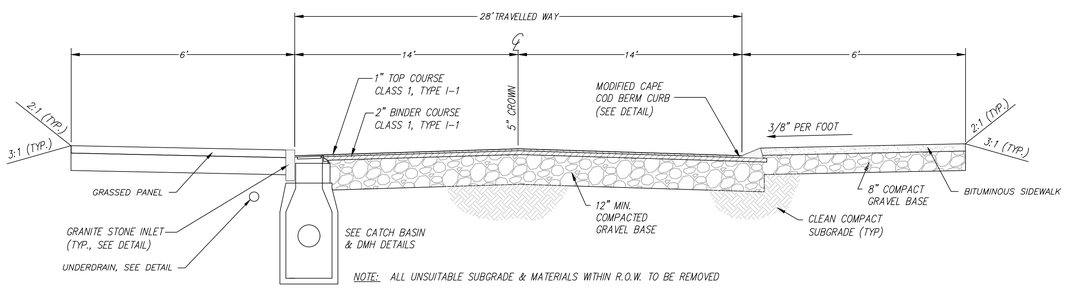

STANDARD ROADWAY CROSS - SECTION (1)
NOT TO SCALE

GRAPHIC SCALE
100 0 50 100 200 400
(IN FEET)
1 inch = 100 ft.

DIG SAFE
BEFORE YOU DIG
CALL 811 OR
1-888-DIG-SAFE
1-888-344-7233

R:\PROJECTS\2889-01\CIVIL\DRAWINGS\CURRENT\C-2889-01_GRADING & DRAINAGE.DWG

APPROVAL UNDER SITE PLAN APPROVAL REQUIRED. SUBJECT TO A COVENANT TO BE RECORDED HEREWITH.

DATE: _____

LEICESTER PLANNING BOARD

I CERTIFY THAT NO NOTICE OF APPEAL WAS RECEIVED DURING THE TWENTY (20) RECORDING DAYS NEXT AFTER RECEIPT AND OF NOTICE FROM THE PLANNING BOARD OF THE APPROVAL OF THIS PLAN

TOWN CLERK, TOWN OF LEICESTER

COMMONWEALTH OF MASSACHUSETTS
MICHAEL A. MALYNOWSKI
CIVIL
No. 47269
REGISTERED PROFESSIONAL ENGINEER

Digitally signed by Michael Malynowski
Date: 2022.02.06 21:17:29 -05'00'

PROFESSIONAL ENGINEER FOR
ALLEN & MAJOR ASSOCIATES, INC.

REV	DATE	DESCRIPTION
4	02-07-22	MISC. REVISIONS PER TOWN COMMENTS
3	12-14-21	MISC. REVISIONS PER TOWN COMMENTS
2	11-10-21	MISC. REVISIONS PER TOWN COMMENTS
1	10-05-21	MISC. REVISIONS PER TOWN COMMENTS

APPLICANT:
MKEP 770 LLC
265 SUNRISE HIGHWAY, SUITE 1368
ROCKVILLE CENTER, NY 11570

PROJECT:
SKYVIEW ESTATES
RESIDENTIAL DEVELOPMENT
MAIN STREET
LEICESTER, MA

PROJECT NO.	2889-01	DATE:	09-17-21
SCALE:	1" = 100'	DWG. :	C289-01_Grading & Drainage
DESIGNED BY:	SM	CHECKED BY:	MAM

PREPARED BY:

ALLEN & MAJOR ASSOCIATES, INC.
civil engineering ♦ land surveying
environmental consulting ♦ landscape architecture
www.allenmajor.com
100 COMMERCE WAY, SUITE 5
WOBURN MA 01801
TEL: (781) 935-6889
FAX: (781) 935-2896
WOBURN, MA ♦ LAKEVILLE, MA ♦ MANCHESTER, NH

THIS DRAWING HAS BEEN PREPARED IN DIGITAL FORMAT. CLIENT/CLIENT'S REPRESENTATIVE OR CONSULTANTS MAY BE PROVIDED COPIES OF DRAWINGS AND SPECIFICATIONS FOR HIS/HER INFORMATION AND/OR SPECIFIC USE ON THIS PROJECT. DUE TO THE POTENTIAL THAT THE PROVIDED INFORMATION MAY BE MODIFIED UNINTENTIONALLY OR OTHERWISE, ALLEN & MAJOR ASSOCIATES, INC. MAY REMOVE ALL INDICATION OF THE DOCUMENT'S AUTHORSHIP ON THE DIGITAL MEDIA. PRINTED REPRESENTATIONS OR PORTABLE DOCUMENT FORMAT OF THE DRAWINGS AND SPECIFICATIONS ISSUED SHALL BE THE ONLY RECORD COPIES OF ALLEN & MAJOR ASSOCIATES, INC.'S WORK PRODUCT.

DRAWING TITLE:
ROADWAY PROFILE
SKYVIEW DRIVE

SHEET No.
C-201

Copyright © 2022 Allen & Major Associates, Inc.
All Rights Reserved

GENERAL NOTES

1. REFER TO SHEET C-102 FOR ADDITIONAL INFORMATION
2. ALL CONSTRUCTION SHALL CONFORM TO THE APPLICABLE REGULATIONS AND STANDARDS INCLUDING THE TOWN OF LEICESTER, MDOT, MADEP, MUTCD, AND AASHTO.
3. ANY DAMAGE TO PRIVATE OR PUBLIC PROPERTIES DUE TO THE CONTRACTOR'S ACTIVITIES SHALL BE REPAIRED AND RESTORED BY THE CONTRACTOR AT THEIR OWN EXPENSE.
4. THE ENGINEER SHALL BE NOTIFIED IN WRITING OF ANY UTILITIES INTERFERING WITH THE PROPOSED CONSTRUCTION AND APPROPRIATE REMEDIAL ACTION TAKEN BEFORE PROCEEDING WITH THE WORK. IT SHALL BE THE RESPONSIBILITY OF THE CONTRACTOR TO RELOCATE ALL EXISTING UTILITIES WHICH CONFLICT WITH THE PROPOSED IMPROVEMENTS SHOWN ON THE PLANS
5. THE INFORMATION SHOWN ON THIS PLAN IS THE SOLE PROPERTY OF ALLEN & MAJOR ASSOCIATES, INC. ITS INTENDED USE IS TO PROVIDE INFORMATION. ANY ALTERATION, MISUSE, OR RECALCULATION OF INFORMATION OR DATA WITHOUT THE EXPRESSED , WRITTEN CONSENT OF ALLEN & MAJOR ASSOCIATES, INC. IS STRICTLY PROHIBITED.
6. THE CONTRACTOR IS RESPONSIBLE FOR THE MEANS AND METHODS OF CONSTRUCTION AND FOR CONDITIONS OF THE SITE. THESE PLANS PREPARED BY ALLEN & MAJOR ASSOCIATES, INC., DO NOT EXTEND TO, NOR INCLUDE SYSTEMS PERTAINING TO THE SAFETY OF THE CONSTRUCTION CONTRACTOR OR THE EMPLOYEES, AGENTS OF REPRESENTATIVES IN PERFORMANCE OF THE WORK. THE SEAL OF THE ARCHITECT OR ENGINEER HEREON DOES NOT EXTEND TO ANY SUCH SAFETY SYSTEMS THAT MAY NOW OR HEREAFTER BE INCORPORATED INTO THESE PLANS. THE CONSTRUCTION CONTRACTOR SHALL PREPARE OF OBTAIN THE APPROPRIATE SAFETY SYSTEMS THAT MAY BE REQUIRED BY THE US OCCUPATIONAL SAFETY AND HEATH ADMINISTRATION (OSHA) AND/OR LOCAL REGULATIONS.
7. IT IS THE RESPONSIBILITY OF THE CONTRACTOR TO REVIEW ALL DRAWINGS AND SPECIFICATIONS ASSOCIATED WITH THE PROJECT WORK SCOPE PRIOR TO THE START OF CONSTRUCTION. SHOULD THE CONTRACTOR FIND A CONFLICT WITH THE DRAWINGS, SPECIFICATIONS, OR RELATIVE CODES, IT IS THE RESPONSIBILITY OF THE CONTRACTOR TO NOTIFY THE ENGINEER AND/OR ARCHITECT PRIOR TO START OF CONSTRUCTION. FAILURE BY THE CONTRACTOR TO NOTIFY THE ENGINEER AND/OR ARCHITECT SHALL CONSTITUTE ACCEPTANCE OF FULL RESPONSIBILITY BY THE CONTRACTOR TO COMPLETE THE SCOPE OF WORK AND/OR DESIGN INTENT OF THE DRAWINGS AND IN FULL COMPLIANCE WITH LOCAL REGULATIONS AND CODES.
8. THE DESIGN ENGINEER WAIVES ANY AND ALL RESPONSIBILITY AND LIABILITY FOR PROBLEMS WHICH ARISE FROM FAILURE TO FOLLOW THESE PLANS, SPECIFICATIONS, AND/OR THE DESIGN INTENT THEY CONVEY, OR FOR PROBLEMS WHICH ARISE FROM OTHERS' FAILURE TO OBTAIN AND/OR FOLLOW THE GUIDANCE OF THE DESIGN ENGINEER WITH RESPECT TO ANY ERRORS, OMISSIONS, INCONSISTENCIES, AMBIGUITIES, OR CONFLICTS WHICH ARE DISCOVERED OR ALLEGED.

EMERGENCY ACCESS CENTERLINE PROFILE
VERTICAL EXAGGERATION = 10.0

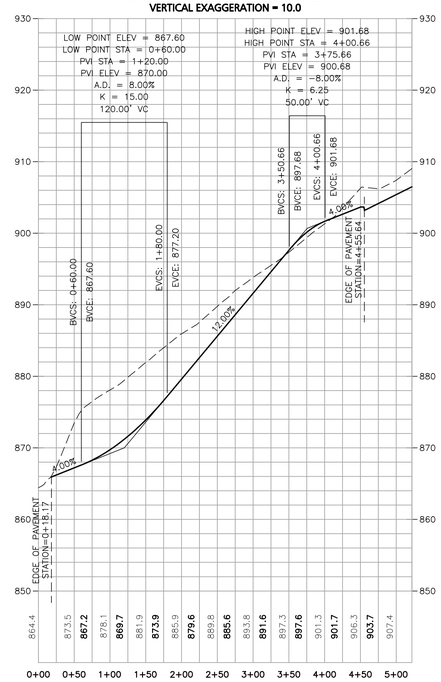

KETTLE LANE CENTERLINE PROFILE
VERTICAL EXAGGERATION = 10.0

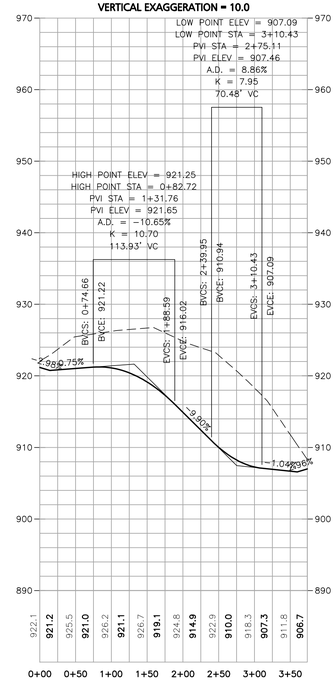

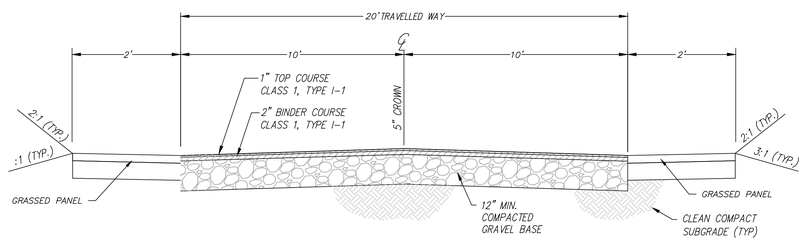

NOTE: ALL UNSUITABLE SUBGRADE & MATERIALS WITHIN R.O.W. TO BE REMOVED

EMERGENCY ACCESS CROSS - SECTION (1)
NOT TO SCALE

GRAPHIC SCALE
100 0 50 100 200 400
(IN FEET)
1 inch = 100 ft.

DIG SAFE
BEFORE YOU DIG
CALL 811 OR
1-888-DIG-SAFE
1-888-344-7233

R:\PROJECTS\2889-01\CIVIL\DRAWINGS\CURRENT\C-2889-01_GRADING & DRAINAGE.DWG

APPROVAL UNDER SITE PLAN APPROVAL REQUIRED. SUBJECT TO A COVENANT TO BE RECORDED HEREWITH.

DATE: _____

LEICESTER PLANNING BOARD

I CERTIFY THAT NO NOTICE OF APPEAL WAS RECEIVED DURING THE TWENTY (20) RECORDING DAYS NEXT AFTER RECEIPT AND OF NOTICE FROM THE PLANNING BOARD OF THE APPROVAL OF THIS PLAN

TOWN CLERK, TOWN OF LEICESTER

COMMONWEALTH OF MASSACHUSETTS
MICHAEL A. MALYNOWSKI
CIVIL
No. 47269
REGISTERED PROFESSIONAL ENGINEER

Digitally signed by Michael Malynowski
Date: 2022.02.06 21:17:29 -05'00'

PROFESSIONAL ENGINEER FOR
ALLEN & MAJOR ASSOCIATES, INC.

REV	DATE	DESCRIPTION
4	02-07-22	MISC. REVISIONS PER TOWN COMMENTS
3	12-14-21	MISC. REVISIONS PER TOWN COMMENTS
2	11-10-21	MISC. REVISIONS PER TOWN COMMENTS
1	10-05-21	MISC. REVISIONS PER TOWN COMMENTS

APPLICANT:
MKEP 770 LLC
265 SUNRISE HIGHWAY, SUITE 1368
ROCKVILLE CENTER, NY 11570

PROJECT:
SKYVIEW ESTATES
RESIDENTIAL DEVELOPMENT
MAIN STREET
LEICESTER, MA

PROJECT NO.	2889-01	DATE:	09-17-21
SCALE:	1" = 100'	DWG. :	C2889-01_Grading & Drainage
DESIGNED BY:	SM	CHECKED BY:	MAM

PREPARED BY:
ALLEN & MAJOR ASSOCIATES, INC.
civil engineering ♦ land surveying
environmental consulting ♦ landscape architecture
www.allenmajor.com
100 COMMERCE WAY, SUITE 5
WOBURN MA 01801
TEL: (781) 935-6889
FAX: (781) 935-2896
WOBURN, MA ♦ LAKEVILLE, MA ♦ MANCHESTER, NH

THIS DRAWING HAS BEEN PREPARED IN DIGITAL FORMAT. CLIENT/CLIENT'S REPRESENTATIVE OR CONSULTANTS MAY BE PROVIDED COPIES OF DRAWINGS AND SPECIFICATIONS FOR HIS/HER INFORMATION AND/OR SPECIFIC USE ON THIS PROJECT. DUE TO THE POTENTIAL THAT THE PROVIDED INFORMATION MAY BE MODIFIED UNINTENTIONALLY OR OTHERWISE, ALLEN & MAJOR ASSOCIATES, INC. MAY REMOVE ALL INDICATION OF THE DOCUMENT'S AUTHORSHIP ON THE DIGITAL MEDIA. PRINTED REPRESENTATIONS OR PORTABLE DOCUMENT FORMAT OF THE DRAWINGS AND SPECIFICATIONS ISSUED SHALL BE THE ONLY RECORD COPIES OF ALLEN & MAJOR ASSOCIATES, INC.'S WORK PRODUCT.

DRAWING TITLE:
ROADWAY PROFILES
KETTLE LANE &
EMERGENCY ACCESS

Copyright © 2022 Allen & Major Associates, Inc.
All Rights Reserved

SHEET No.
C-202

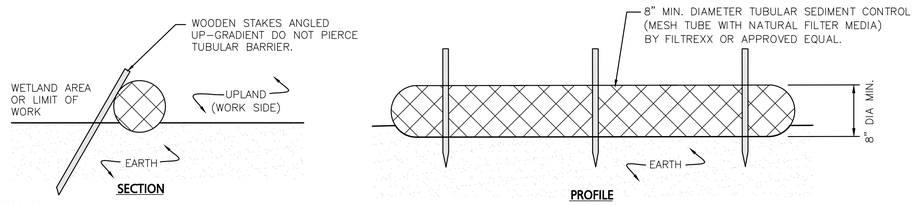

NOTES:
1. TUBULAR SEDIMENT CONTROL SHALL BE 8" MIN. DIAMETER MESH TUBE WITH NATURAL FILTER MEDIA BY FILTREXX OR APPROVED EQUAL.
2. ALL MATERIALS TO MEET MANUFACTURERS SPECIFICATIONS.
3. INSTALL WOODEN STAKES ANGLED UP-GRADIENT EVERY 8' ON CENTER
4. OVERLAP TUBULAR BARRIER SEGMENTS A MINIMUM OF 12".
5. THE CONTRACTOR SHALL MAINTAIN THE TUBULAR BARRIERS IN A FUNCTIONAL CONDITION AT ALL TIMES. THE CONTROLS SHALL BE ROUTINELY INSPECTED BY THE CONTRACTOR.
6. WHERE THE TUBULAR BARRIERS REQUIRE REPAIR OR SEDIMENT REMOVAL, IT WILL BE COMPLETED BY THE CONTRACTOR AT NO ADDITIONAL COST.
7. AT A MINIMUM, THE CONTRACTOR SHALL REMOVE SEDIMENTS COLLECTED AT THE BASE WHEN THEY REACH 1/3 THE EXPOSED HEIGHT OF THE BARRIER.

TUBULAR SEDIMENT BARRIER (1)
NOT TO SCALE

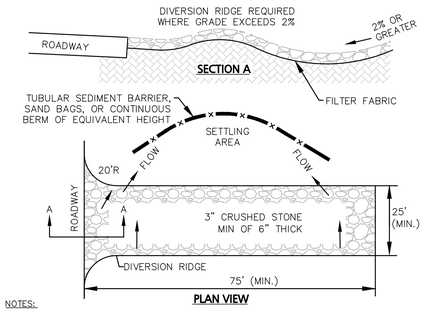

NOTES:
1. THE ENTRANCE SHALL BE MAINTAINED IN A CONDITION THAT WILL PREVENT TRACKING OR FLOWING OF SEDIMENT ONTO PUBLIC RIGHT-OF-WAYS. THIS MAY REQUIRE TOP DRESSING, REPAIR AND/OR CLEANOUT OF ANY MEASURES USED TO TRAP SEDIMENT.
2. WHEN NECESSARY, WHEELS SHALL BE CLEANED PRIOR TO ENTERING THE PUBLIC RIGHT-OF-WAY.
3. WHEN WASHING IS REQUIRED, IT SHALL BE DONE ON AN AREA STABILIZED WITH CRUSHED STONE THAT DRAINS INTO AN APPROVED SEDIMENT TRAP OR SEDIMENT BASIN.

STABILIZED CONSTRUCTION ENTRANCE (3)
NOT TO SCALE

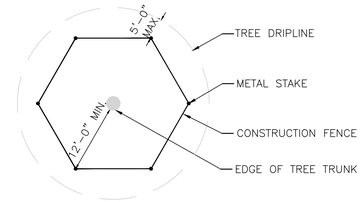

NOTE:
1. CONSTRUCTION FENCE TO BE "VISUAL BARRIER FENCE" AS MANUFACTURED BY EXXON CHEMICAL COMPANY ATLANTA, GA; "KONTROL SAFETY FENCE" AS MANUFACTURED BY MIRAFI, CHARLOTTE, N.C. OR APPROVED EQUAL.
2. IF GROUPS OF TREES ARE TO BE PROTECTED, EXTEND FENCE AROUND PERIMETER TO CONFORM TO MINIMUM DIMENSIONS FOR TREE TRUNKS AND DRIPLINE.

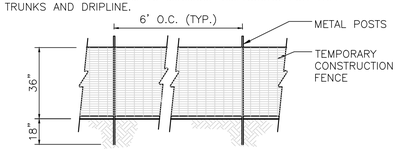

TEMP. CONST. FENCE/TREE PROTECTION (4)
NOT TO SCALE

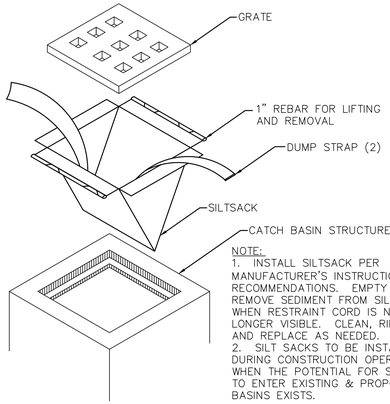

NOTE:
1. INSTALL SILTSACK PER MANUFACTURER'S INSTRUCTIONS AND RECOMMENDATIONS. EMPTY OR REMOVE SEDIMENT FROM SILTSACK WHEN RESTRAINT CORD IS NO LONGER VISIBLE. CLEAN, RINSE, AND REPLACE AS NEEDED.
2. SILT SACKS TO BE INSTALLED DURING CONSTRUCTION OPERATIONS WHEN THE POTENTIAL FOR SEDIMENT TO ENTER EXISTING & PROPOSED BASINS EXISTS.

CATCH BASIN INLET PROTECTION (4)
NOT TO SCALE

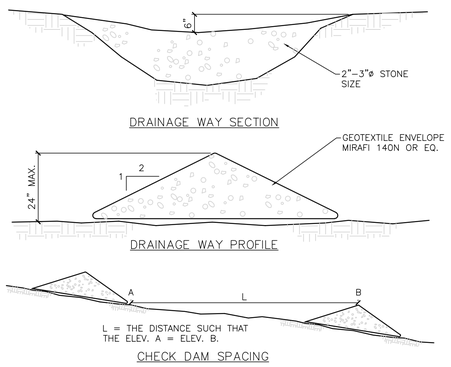

STONE CHECK DAMS (5)
NOT TO SCALE

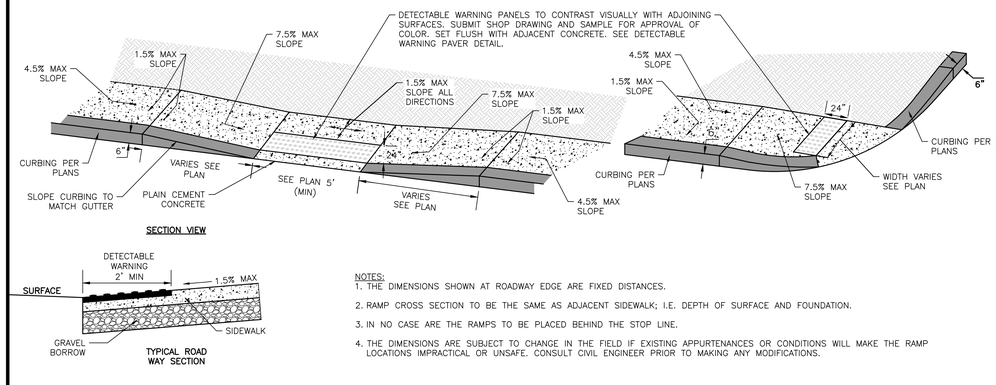

NOTES:
1. THE DIMENSIONS SHOWN AT ROADWAY EDGE ARE FIXED DISTANCES.
2. RAMP CROSS SECTION TO BE THE SAME AS ADJACENT SIDEWALK; I.E. DEPTH OF SURFACE AND FOUNDATION.
3. IN NO CASE ARE THE RAMPS TO BE PLACED BEHIND THE STOP LINE.
4. THE DIMENSIONS ARE SUBJECT TO CHANGE IN THE FIELD IF EXISTING APPURTENANCES OR CONDITIONS WILL MAKE THE RAMP LOCATIONS IMPRACTICAL OR UNSAFE. CONSULT CIVIL ENGINEER PRIOR TO MAKING ANY MODIFICATIONS.

ADA ACCESSIBLE CURB CUT AND TRANSITION (7)
NOT TO SCALE

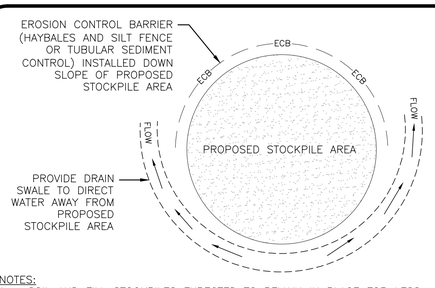

NOTES:
1. SOIL AND FILL STOCKPILES EXPECTED TO REMAIN IN PLACE FOR LESS THAN 90 DAYS SHALL BE COVERED WITH HAY AND MULCH (AT 100LBS/1,000 SF), OR WITH AN ANCHORED TARP WITHIN 7 DAYS OR PRIOR TO ANY RAINFALL.
2. SOIL AND FILL STOCKPILES EXPECTED TO REMAIN IN PLACE FOR 90 DAYS OR MORE SHALL BE SEEDED WITH WINTER RYE (FOR FALL SEEDING AT 3LB/1,000 SF) OR OATS (FOR SUMMER SEEDING AT 2LB/1,000 SF) AND THEN COVERED WITH HAY MULCH (AT 100LB/1,000 SF) OR AN ANCHORED TARP WITHIN 7 DAYS OR PRIOR TO ANY RAINFALL.

STOCKPILE PROTECTION (8)
NOT TO SCALE

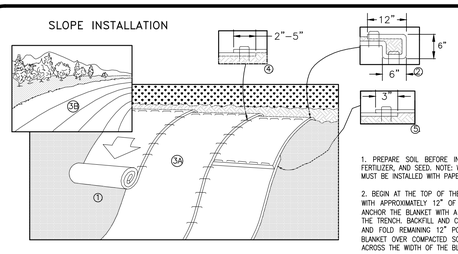

1. PREPARE SOIL BEFORE INSTALLING BLANKETS, INCLUDING ANY NECESSARY APPLICATION OF LIME, FERTILIZER, AND SEED. NOTE: WHEN USING CELL-O-SEED DO NOT SEED PREPARED AREA. CELL-O-SEED MUST BE INSTALLED WITH PAPER SIDE DOWN.

2. BEGIN AT THE TOP OF THE SLOPE BY ANCHORING THE BLANKET IN A 6" DEEP X 6" WIDE TRENCH WITH APPROXIMATELY 12" OF BLANKET EXTENDED BEYOND THE UP-SLOPE PORTION OF THE TRENCH. ANCHOR THE BLANKET WITH A ROW OF STAPLES/STAKES APPROXIMATELY 12" APART IN THE BOTTOM OF THE TRENCH. BACKFILL AND COMPACT THE TRENCH AFTER STAPLING. APPLY SEED TO COMPACTED SOIL AND FOLD REMAINING 12" PORTION OF BLANKET BACK OVER SEED AND COMPACTED SOIL. SECURE BLANKET OVER COMPACTED SOIL WITH A ROW OF STAPLES/STAKES SPACED APPROXIMATELY 12" APART ACROSS THE WIDTH OF THE BLANKET.

3. ROLL THE BLANKETS (A) DOWN OR (B) HORIZONTALLY ACROSS THE SLOPE. BLANKETS WILL UNROLL WITH APPROPRIATE SIDE AGAINST THE SOIL SURFACE. ALL BLANKETS MUST BE SECURELY FASTENED TO SOIL SURFACE BY PLACING STAPLES/STAKES IN APPROPRIATE LOCATIONS AS SHOWN IN THE STAPLE PATTERN GUIDE. WHEN USING OPTIONAL DOT SYSTEM, STAPLES/STAKES SHOULD BE PLACED THROUGH EACH OF THE COLORED DOTS CORRESPONDING TO THE APPROPRIATE STAPLE PATTERN.

4. THE EDGES OF PARALLEL BLANKETS MUST BE STAPLED WITH APPROXIMATELY 2"-5" OVERLAP DEPENDING ON BLANKET TYPE. TO ENSURE PROPER SEAM ALIGNMENT, PLACE THE EDGE OF THE OVERLAPPING BLANKET (BLANKET BEING INSTALLED ON TOP) EVEN WITH THE COLORED SEAM STITCH ON THE PREVIOUSLY INSTALLED BLANKET.

5. CONSECUTIVE BLANKETS SPLICED DOWN THE SLOPE MUST BE PLACED END OVER END (SHINGLE STYLE) WITH AN APPROXIMATE 3" OVERLAP. STAPLE THROUGH OVERLAPPED AREA, APPROXIMATELY 12"APART ACROSS ENTIRE BLANKET WIDTH.

6. IN LOOSE SOIL CONDITIONS, THE USE OF STAPLE OR STAKE LENGTHS GREATER THAN 6" MAY BE NECESSARY TO PROPERLY SECURE THE BLANKETS.

7. INSTALL PRODUCT IN ACCORDANCE WITH MANUFACTURER'S SPECIFICATIONS.

SLOPE PROTECTION EROSION CONTROL MATTING (5)
NOT TO SCALE

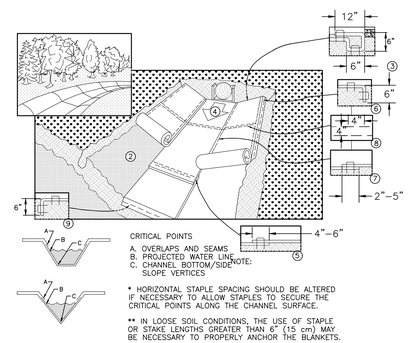

CHANNEL INSTALLATION SPECIFICATIONS

1. Install product in accordance with manufacturer's specifications

2. Prepare soil before installing blankets, including any necessary application of lime, fertilizer, and seed. Note: when using cell-o-seed, do not seed prepared area. Cell-o-seed must be installed with the paper side down.

3. Begin at the top of the channel by anchoring the blanket in a 6"deep x 6" wide trench with approximately 12" of blanket extended beyond the up-slope portion of the trench. Anchor the blanket with a row of staples/stakes approximately 12" apart in the bottom of the trench. Backfill and compact the trench after stapling. Apply seed to compacted soil and fold remaining 12" portion of blanket over seed and compacted soil. Secure blanket over compacted soil with a row of staples/stakes spaced approximately 12" apart across the width of the blanket.

4. Roll center blanket in direction of water flow in bottom of channel. Blankets will unroll with appropriate side against the soil surface. All blankets must be securely fastened to soil surface by placing staples/stakes in appropriate locations as shown in the staple pattern guide. When using optional dot system, staples/stakes should be placed through each of the colored dots corresponding to the appropriate staple pattern.

5. Place consecutive blankets end over end (shingle style) with a 4"-6" overlap. Use a double row of staples staggered 4" apart and 4"(10") on center to secure blankets.

6. Full-length edge of blankets at top of side slopes must be anchored with a row of staples/stakes approximately 12" apart in a 6"deep x 6" wide trench. Backfill and compact the trench after stapling.

7. Adjacent blankets must be overlapped approximately 2"-5" (depending on blanket type) and stapled to ensure proper seam alignment, place the edge of the overlapping blanket (blanket being installed on top) even with the colored seam stitch on the blanket being overlapped.

8. In high flow channel applications, a staple check slot is recommended at 30' to 40' intervals. Use a double row of staples staggered 4" apart and 4" on center over entire width of channel.

The terminal end of the blankets must be anchored with a row of staples/stakes approximately 12" apart in a 6"deep x 6"wide trench. Backfill and compact the trench after stapling.

ROLLED EROSION CONTROL MATTING (5)
NOT TO SCALE

APPROVAL UNDER SITE PLAN APPROVAL REQUIRED. SUBJECT TO A COVENANT TO BE RECORDED HEREWITH.

DATE: _____

LEICESTER PLANNING BOARD

I CERTIFY THAT NO NOTICE OF APPEAL WAS RECEIVED DURING THE TWENTY (20) RECORDING DAYS NEXT AFTER RECEIPT AND OF NOTICE FROM THE PLANNING BOARD OF THE APPROVAL OF THIS PLAN

TOWN CLERK, TOWN OF LEICESTER

COMMONWEALTH OF MASSACHUSETTS
MICHAEL A. MALYNOWSKI
CIVIL
No. 47269
REGISTERED PROFESSIONAL ENGINEER

Digitally signed by Michael Malynowski
Date: 2022.02.06 21:17:29 -05'00'

PROFESSIONAL ENGINEER FOR
ALLEN & MAJOR ASSOCIATES, INC.

REV	DATE	DESCRIPTION
4	02-07-22	MISC. REVISIONS PER TOWN COMMENTS
3	12-14-21	MISC. REVISIONS PER TOWN COMMENTS
2	11-10-21	MISC. REVISIONS PER TOWN COMMENTS
1	10-05-21	MISC. REVISIONS PER TOWN COMMENTS

APPLICANT:
MKEP 770 LLC
265 SUNRISE HIGHWAY, SUITE 1368
ROCKVILLE CENTER, NY 11570

PROJECT:
SKYVIEW ESTATES
RESIDENTIAL DEVELOPMENT
MAIN STREET
LEICESTER, MA

PROJECT NO.	2889-01	DATE:	09-17-21
SCALE:	AS SHOWN	DWG. :	C-2889-01_Details
DESIGNED BY:	SM	CHECKED BY:	MAM

PREPARED BY:

ALLEN & MAJOR ASSOCIATES, INC.
civil engineering ♦ land surveying
environmental consulting ♦ landscape architecture
www.allenmajor.com
100 COMMERCE WAY, SUITE 5
WOBURN MA 01801
TEL: (781) 935-6889
FAX: (781) 935-2896
WOBURN, MA ♦ LAKEVILLE, MA ♦ MANCHESTER, NH

THIS DRAWING HAS BEEN PREPARED IN DIGITAL FORMAT. CLIENT/CLIENT'S REPRESENTATIVE OR CONSULTANTS MAY BE PROVIDED COPIES OF DRAWINGS AND SPECIFICATIONS FOR HIS/HER INFORMATION AND/OR SPECIFIC USE ON THIS PROJECT. DUE TO THE POTENTIAL THAT THE PROVIDED INFORMATION MAY BE MODIFIED UNINTENTIONALLY OR OTHERWISE, ALLEN & MAJOR ASSOCIATES, INC. MAY REMOVE ALL INDICATION OF THE DOCUMENT'S AUTHORSHIP ON THE DIGITAL MEDIA. PRINTED REPRESENTATIONS OR PORTABLE DOCUMENT FORMAT OF THE DRAWINGS AND SPECIFICATIONS ISSUED SHALL BE THE ONLY RECORD COPIES OF ALLEN & MAJOR ASSOCIATES, INC.'S WORK PRODUCT.

DRAWING TITLE: DETAILS

SHEET No. C-501

Copyright © 2022 Allen & Major Associates, Inc.
All Rights Reserved

R:\PROJECTS\2889-01\CIVIL\DRAWINGS\CURRENT\C-2889-01_DETAILS.DWG

CASCADE SEPARATOR DESIGN NOTES

CS-5 RATED TREATMENT CAPACITY IS 3.50 CFS, OR PER LOCAL REGULATIONS.
THE STANDARD CS-5 CONFIGURATION IS SHOWN. ALTERNATE CONFIGURATIONS ARE AVAILABLE AND ARE LISTED BELOW. SOME CONFIGURATIONS MAY BE COMBINED TO SUIT SITE REQUIREMENTS.

CONFIGURATION DESCRIPTION

- GRATED INLET ONLY (NO INLET PIPE)
- GRATED INLET WITH INLET PIPE OR PIPES
- CURB INLET ONLY (NO INLET PIPE)
- CURB INLET WITH INLET PIPE OR PIPES

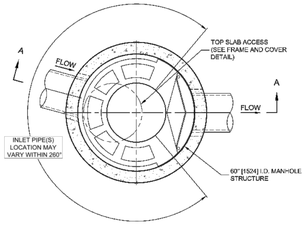

PLAN VIEW B-B
NOT TO SCALE

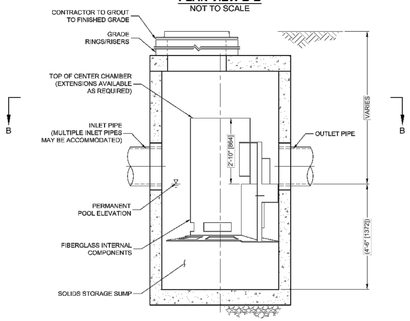

ELEVATION A-A
NOT TO SCALE

CASCADE separator™

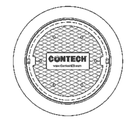

FRAME AND COVER
(DIAMETER VARIES)
NOT TO SCALE

SITE SPECIFIC DATA REQUIREMENTS

STRUCTURE ID			
WATER QUALITY FLOW RATE (cfs [L/s])			
PEAK FLOW RATE (cfs [L/s])			
RETURN PERIOD OF PEAK FLOW (yrs)			
RIM ELEVATION			
PIPE DATA:	INVERT	MATERIAL	DIAMETER
INLET PIPE 1			
INLET PIPE 2			
OUTLET PIPE			
NOTES/SPECIAL REQUIREMENTS:			

GENERAL NOTES
1. CONTECH TO PROVIDE ALL MATERIALS UNLESS NOTED OTHERWISE.
2. FOR SITE SPECIFIC DRAWINGS WITH DETAILED STRUCTURE DIMENSIONS AND WEIGHT, PLEASE CONTACT YOUR CONTECH ENGINEERED SOLUTIONS LLC REPRESENTATIVE. www.ContechES.com
3. CASCADE SEPARATOR WATER QUALITY STRUCTURE SHALL BE IN ACCORDANCE WITH ALL DESIGN DATA AND INFORMATION CONTAINED IN THIS DRAWING. CONTRACTOR TO CONFIRM STRUCTURE MEETS REQUIREMENTS OF PROJECT.
4. CASCADE SEPARATOR STRUCTURE SHALL MEET AASHTO HS20 LOAD RATING, ASSUMING EARTH COVER OF 0' - 2' [610], AND GROUNDWATER ELEVATION AT, OR BELOW, THE OUTLET PIPE INVERT ELEVATION. ENGINEER OF RECORD TO CONFIRM ACTUAL GROUNDWATER ELEVATION. CASTINGS SHALL MEET AASHTO M306 AND BE CAST WITH THE CONTECH LOGO.
5. CASCADE SEPARATOR STRUCTURE SHALL BE PRECAST CONCRETE CONFORMING TO ASTM C478 AND AASHTO LOAD FACTOR DESIGN METHOD.
6. ALTERNATE UNITS ARE SHOWN IN MILLIMETERS [mm].

INSTALLATION NOTES
A. ANY SUB-BASE, BACKFILL DEPTH, AND/OR ANTI-FLOTATION PROVISIONS ARE SITE-SPECIFIC DESIGN CONSIDERATIONS AND SHALL BE SPECIFIED BY ENGINEER OF RECORD.
B. CONTRACTOR TO PROVIDE EQUIPMENT WITH SUFFICIENT LIFTING AND REACH CAPACITY TO LIFT AND SET THE CASCADE SEPARATOR MANHOLE STRUCTURE.
C. CONTRACTOR TO INSTALL JOINT SEALANT BETWEEN ALL STRUCTURE SECTIONS AND ASSEMBLE STRUCTURE.
D. CONTRACTOR TO PROVIDE, INSTALL, AND GROUT INLET AND OUTLET PIPE(S). MATCH PIPE INVERTS WITH ELEVATIONS SHOWN. ALL PIPE CENTERLINES TO MATCH PIPE OPENING CENTERLINES.
E. CONTRACTOR TO TAKE APPROPRIATE MEASURES TO ASSURE UNIT IS WATER TIGHT, HOLDING WATER TO FLOWLINE INVERT MINIMUM. IT IS SUGGESTED THAT ALL JOINTS BELOW PIPE INVERTS ARE GROUTED.

CONTECH ENGINEERED SOLUTIONS LLC
www.contechES.com
9025 Centre Pointe Dr., Suite 400, West Chester, OH 45069
800-338-1122 513-645-7900 513-645-7993 FAX

CS-5
CASCADE SEPARATOR
STANDARD DETAIL

1

CDS2015-4-C DESIGN NOTES

CDS2015-4-C RATED TREATMENT CAPACITY IS 1.4 CFS, OR PER LOCAL REGULATIONS.

THE STANDARD CDS2015-4-C CONFIGURATION IS SHOWN. ALTERNATE CONFIGURATIONS ARE AVAILABLE AND ARE LISTED BELOW. SOME CONFIGURATIONS MAY BE COMBINED TO SUIT SITE REQUIREMENTS.

CONFIGURATION DESCRIPTION

- GRATED INLET ONLY (NO INLET PIPE)
- GRATED INLET WITH INLET PIPE OR PIPES
- CURB INLET ONLY (NO INLET PIPE)
- CURB INLET WITH INLET PIPE OR PIPES

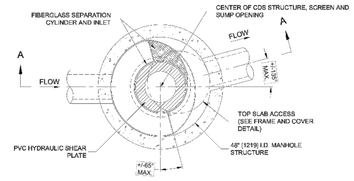

PLAN VIEW B-B
N.T.S.

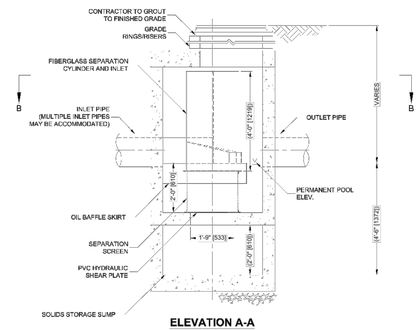

ELEVATION A-A
N.T.S.

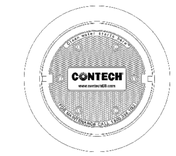

FRAME AND COVER
(DIAMETER VARIES)
N.T.S.

SITE SPECIFIC DATA REQUIREMENTS

STRUCTURE ID			
WATER QUALITY FLOW RATE (CFS OR L/s)			*
PEAK FLOW RATE (CFS OR L/s)			*
RETURN PERIOD OF PEAK FLOW (YRS)			*
SCREEN APERTURE (2400 OR 4700)			*
PIPE DATA:	I.E.	MATERIAL	DIAMETER
INLET PIPE 1	*	*	*
INLET PIPE 2	*	*	*
OUTLET PIPE	*	*	*
RIM ELEVATION			*
ANTI-FLOTATION BALLAST	WIDTH	HEIGHT	
NOTES/SPECIAL REQUIREMENTS:	*	*	

* PER ENGINEER OF RECORD

GENERAL NOTES
1. CONTECH TO PROVIDE ALL MATERIALS UNLESS NOTED OTHERWISE.
2. FOR SITE SPECIFIC DRAWINGS WITH DETAILED STRUCTURE DIMENSIONS AND WEIGHT, PLEASE CONTACT YOUR CONTECH ENGINEERED SOLUTIONS LLC REPRESENTATIVE. www.ContechES.com
3. CDS WATER QUALITY STRUCTURE SHALL BE IN ACCORDANCE WITH ALL DESIGN DATA AND INFORMATION CONTAINED IN THIS DRAWING. CONTRACTOR TO CONFIRM STRUCTURE MEETS REQUIREMENTS OF PROJECT.
4. STRUCTURE SHALL MEET AASHTO HS20 LOAD RATING, ASSUMING EARTH COVER OF 0' - 2', AND GROUNDWATER ELEVATION AT, OR BELOW, THE OUTLET PIPE INVERT ELEVATION. ENGINEER OF RECORD TO CONFIRM ACTUAL GROUNDWATER ELEVATION. CASTINGS SHALL MEET AASHTO M306 AND BE CAST WITH THE CONTECH LOGO.
5. IF REQUIRED, PVC HYDRAULIC SHEAR PLATE IS PLACED ON SHELF AT BOTTOM OF SCREEN CYLINDER. REMOVE AND REPLACE AS NECESSARY DURING MAINTENANCE CLEANING.
6. CDS STRUCTURE SHALL BE PRECAST CONCRETE CONFORMING TO ASTM C-478 AND AASHTO LOAD FACTOR DESIGN METHOD.

INSTALLATION NOTES
A. ANY SUB-BASE, BACKFILL DEPTH, AND/OR ANTI-FLOTATION PROVISIONS ARE SITE-SPECIFIC DESIGN CONSIDERATIONS AND SHALL BE SPECIFIED BY ENGINEER OF RECORD.
B. CONTRACTOR TO PROVIDE EQUIPMENT WITH SUFFICIENT LIFTING AND REACH CAPACITY TO LIFT AND SET THE CDS MANHOLE STRUCTURE.
C. CONTRACTOR TO INSTALL JOINT SEALANT BETWEEN ALL STRUCTURE SECTIONS AND ASSEMBLE STRUCTURE.
D. CONTRACTOR TO PROVIDE, INSTALL, AND GROUT INLET AND OUTLET PIPE(S). MATCH PIPE INVERTS WITH ELEVATIONS SHOWN. ALL PIPE CENTERLINES TO MATCH PIPE OPENING CENTERLINES.
E. CONTRACTOR TO TAKE APPROPRIATE MEASURES TO ASSURE UNIT IS WATER TIGHT, HOLDING WATER TO FLOWLINE INVERT MINIMUM. IT IS SUGGESTED THAT ALL JOINTS BELOW PIPE INVERTS ARE GROUTED.

CONTECH ENGINEERED SOLUTIONS LLC
www.contechES.com
9025 Centre Pointe Dr., Suite 400, West Chester, OH 45069
800-338-1122 513-645-7900 513-645-7993 FAX

CDS2015-4-C
ONLINE CDS
STANDARD DETAIL

2

APPROVAL UNDER SITE PLAN APPROVAL REQUIRED. SUBJECT TO A COVENANT TO BE RECORDED HEREWITH.

DATE: _____

LEICESTER PLANNING BOARD

I CERTIFY THAT NO NOTICE OF APPEAL WAS RECEIVED DURING THE TWENTY (20) RECORDING DAYS NEXT AFTER RECEIPT AND OF NOTICE FROM THE PLANNING BOARD OF THE APPROVAL OF THIS PLAN

TOWN CLERK, TOWN OF LEICESTER

COMMONWEALTH OF MASSACHUSETTS — MICHAEL A. MALYNOWSKI — CIVIL — No. 47269 — REGISTERED PROFESSIONAL ENGINEER

Digitally signed by Michael Malynowski
Date: 2022.02.06 21:17:29 -05'00'

PROFESSIONAL ENGINEER FOR
ALLEN & MAJOR ASSOCIATES, INC.

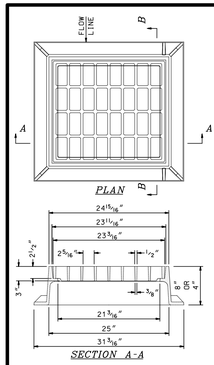

PLAN

SECTION A-A

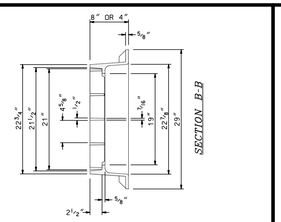

GENERAL NOTES
1. ALL DIMENSIONS ARE NOMINAL.
2. FRAMES USING NARROWER DIMENSIONS FOR THICKNESS ARE ALLOWED PROVIDED:
   A. THE FRAMES MEET OR EXCEED THE SPECIFIED LOAD RATING.
   B. WITHIN THE PERIMETER SEAT AREA, DIMENSIONS OF THE FRAMES REMAIN THE SAME TO ALLOW CONTINUED USE OF EXISTING GRATES/COVERS AS THE EXISTING FRAMES ALLOW, WITHOUT SHIMS OR OTHER MODIFICATIONS OR ACCOMMODATIONS.
   C. ALL OTHER PERTINENT REQUIREMENTS OF THE SPECIFICATIONS ARE MET.
3. FRAME AVAILABLE IN 4" OR 8" HEIGHTS.
4. FREE OPEN AREA = 2.55 S.F.
5. USE 3-FLANGE FRAME IF INSTALLED ADJACENT TO GRANITE CURB.

TYPE "B" GRATE & FRAME 3

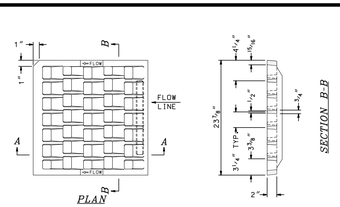

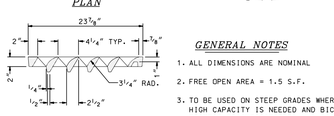

GENERAL NOTES
1. ALL DIMENSIONS ARE NOMINAL
2. FREE OPEN AREA = 1.5 S.F.
3. TO BE USED ON STEEP GRADES WHERE HIGH CAPACITY IS NEEDED AND BICYCLE TRAFFIC IS ANTICIPATED.

TYPE "F" GRATE 4

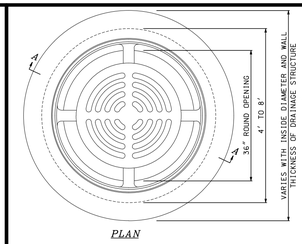

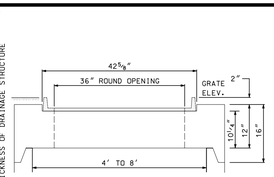

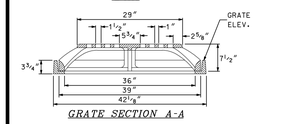

GENERAL NOTES
1. ALL DIMENSIONS ARE NOMINAL.
2. SEE DR-5 FOR ADDITIONAL NOTES.
3. FRAME SHALL BE USED WITH 12" SLAB TOP AND BE INSET 1 3/4" SUBSIDIARY.
4. FREE OPEN AREA = 5.4 S.F.
5. TO BE USED OFF PAVEMENT WHERE HIGH CAPACITY IS NEEDED AND WHERE THE GRATE IS NOT ANTICIPATED TO BE WITHIN OR IMMEDIATELY ADJACENT TO THE PATH OF BICYCLE OR PEDESTRIAN TRAFFIC.

TYPE "G" GRATE, FRAME AND SLAB 5

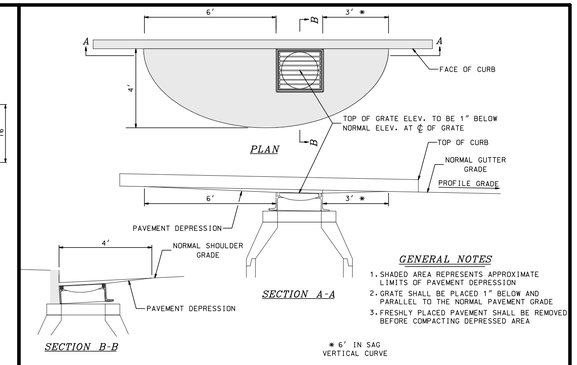

GENERAL NOTES
1. SHADED AREA REPRESENTS APPROXIMATE LIMITS OF PAVEMENT DEPRESSION
2. GRATE SHALL BE PLACED 1" BELOW AND PARALLEL TO THE NORMAL PAVEMENT GRADE
3. FRESHLY PLACED PAVEMENT SHALL BE REMOVED BEFORE COMPACTING DEPRESSED AREA

* 6' IN SAG VERTICAL CURVE

PAVEMENT DEPRESSION DETAIL 6

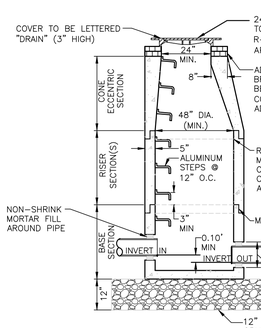

NOTE:
1. THE MANHOLE, INCLUDING ALL COMPONENT PARTS, SHALL HAVE ADEQUATE SPACE AND STRENGTH QUALITIES CONSIDERED NECESSARY FOR THE INTENDED SERVICE. SPACE REQUIREMENT AND CONFIGURATIONS SHALL BE AS SHOWN ON THE DRAWING. THE COMPLETE STRUCTURE SHALL BE OF SUCH MATERIAL AND QUALITY AS TO WITHSTAND (H-20 LOADING) WITHOUT FAILURE.
VERTICAL FOOT OF MANHOLE.

PRECAST DRAIN MANHOLE
NOT TO SCALE
7

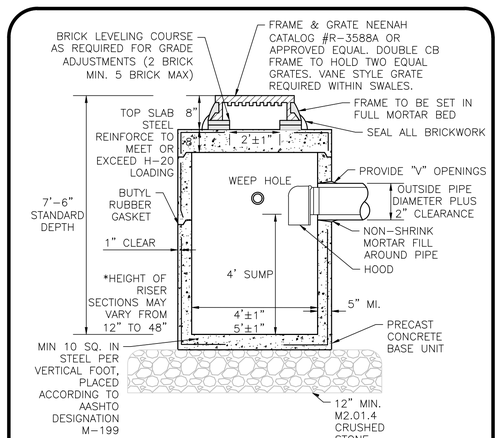

CATCH BASIN
NOT TO SCALE
8

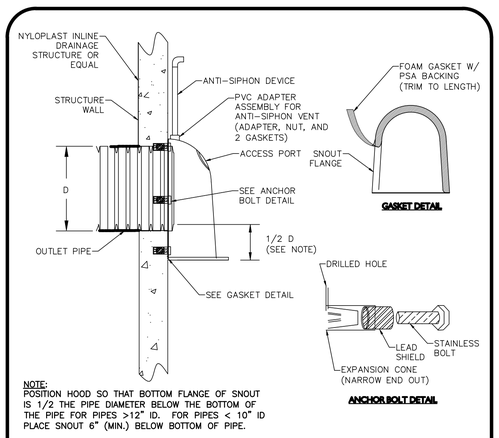

NOTE:
POSITION HOOD SO THAT BOTTOM FLANGE OF SNOUT IS 1/2 THE PIPE DIAMETER BELOW THE BOTTOM OF THE PIPE FOR PIPES >12" ID. FOR PIPES < 10" ID PLACE SNOUT 6" (MIN.) BELOW BOTTOM OF PIPE.

SNOUT OIL & DEBRIS STOP
NOT TO SCALE
9

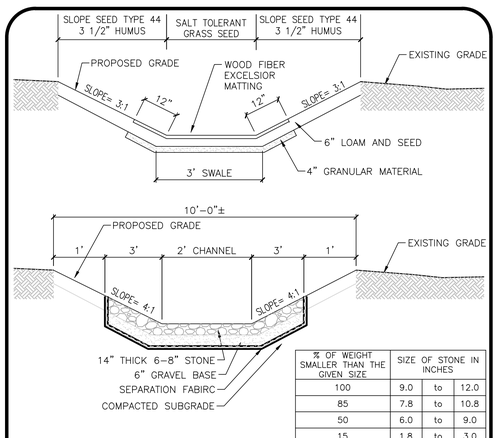

% OF WEIGHT SMALLER THAN THE GIVEN SIZE	SIZE OF STONE IN INCHES		
100	9.0	to	12.0
85	7.8	to	10.8
50	6.0	to	9.0
15	1.8	to	3.0

TYPICAL DRAINAGE SWALE SECTIONS
NOT TO SCALE
10

REV	DATE	DESCRIPTION
4	02-07-22	MISC. REVISIONS PER TOWN COMMENTS
3	12-14-21	MISC. REVISIONS PER TOWN COMMENTS
2	11-10-21	MISC. REVISIONS PER TOWN COMMENTS
1	10-05-21	MISC. REVISIONS PER TOWN COMMENTS

APPLICANT:
MKEP 770 LLC
265 SUNRISE HIGHWAY, SUITE 1368
ROCKVILLE CENTER, NY 11570

PROJECT:
SKYVIEW ESTATES
RESIDENTIAL DEVELOPMENT
MAIN STREET
LEICESTER, MA

PROJECT NO.	2889-01	DATE:	09-17-21
SCALE:	AS SHOWN	DWG. :	C-2889-01_Details
DESIGNED BY:	SM	CHECKED BY:	MAM

PREPARED BY:

ALLEN & MAJOR ASSOCIATES, INC.
civil engineering ♦ land surveying
environmental consulting ♦ landscape architecture
www.allenmajor.com
100 COMMERCE WAY, SUITE 5
WOBURN MA 01801
TEL: (781) 935-6889
FAX: (781) 935-2896
WOBURN, MA ♦ LAKEVILLE, MA ♦ MANCHESTER, NH

THIS DRAWING HAS BEEN PREPARED IN DIGITAL FORMAT. CLIENT/CLIENT'S REPRESENTATIVE OR CONSULTANTS MAY BE PROVIDED COPIES OF DRAWINGS AND SPECIFICATIONS FOR HIS/HER INFORMATION AND/OR SPECIFIC USE ON THIS PROJECT. DUE TO THE POTENTIAL THAT THE PROVIDED INFORMATION MAY BE MODIFIED UNINTENTIONALLY OR OTHERWISE, ALLEN & MAJOR ASSOCIATES, INC. MAY REMOVE ALL INDICATION OF THE DOCUMENT'S AUTHORSHIP ON THE DIGITAL MEDIA. PRINTED REPRESENTATIONS OR PORTABLE DOCUMENT FORMAT OF THE DRAWINGS AND SPECIFICATIONS ISSUED SHALL BE THE ONLY RECORD COPIES OF ALLEN & MAJOR ASSOCIATES, INC.'S WORK PRODUCT.

DRAWING TITLE: DETAILS

SHEET No. C-502

Copyright © 2022 Allen & Major Associates, Inc.
All Rights Reserved

R:\PROJECTS\2889-01\CIVIL\DRAWINGS\CURRENT\C-2889-01_DETAILS.DWG

	A (Elev.)	B (Elev.)	C (Elev.)	D (feet)	E (Elev.)	F (Elev.)	G (Dia)	H (Elev.)	J (Dia)	K (Elev.)	L (Dia)
OCS-04 (DB1)	816.00	814.40	811.00	8.0	813.20	811.00	8" x2	811.90	12" x2	811.00	18"

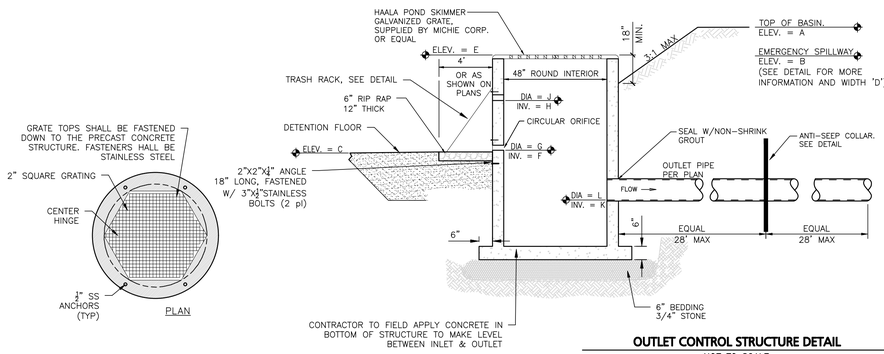

OUTLET CONTROL STRUCTURE DETAIL (1)
NOT TO SCALE

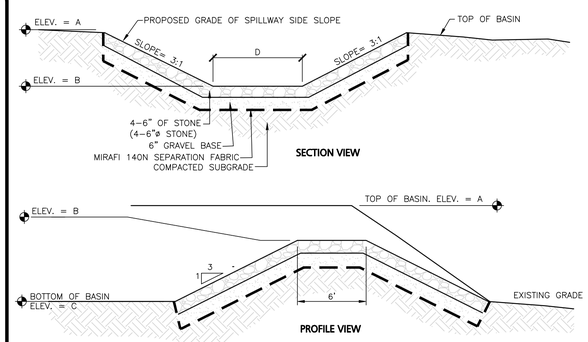

TYPICAL SECTION & PROFILE OF EMERGENCY SPILLWAY (2)
NOT TO SCALE

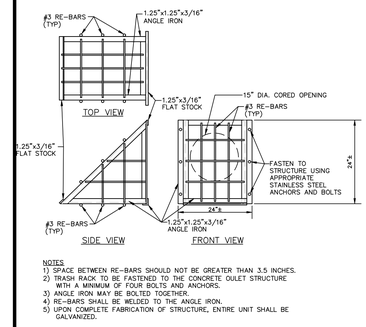

NOTES
1) SPACE BETWEEN RE-BARS SHOULD NOT BE GREATER THAN 3.5 INCHES.
2) TRASH RACK TO BE FASTENED TO THE CONCRETE OULET STRUCTURE WITH A MINIMUM OF FOUR BOLTS AND ANCHORS.
3) ANGLE IRON MAY BE BOLTED TOGETHER.
4) RE-BARS SHALL BE WELDED TO THE ANGLE IRON.
5) UPON COMPLETE FABRICATION OF STRUCTURE, ENTIRE UNIT SHALL BE GALVANIZED.

TRASH RACK (3)
NOT TO SCALE

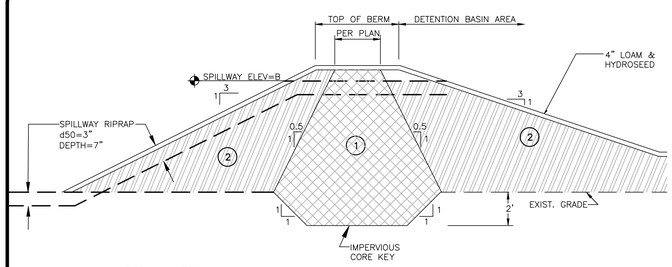

BERM MATERIALS

(1) IMPERVIOUS CORE(CLAY, SILT, & SAND) SHALL CONFORM TO AASHTO T27 AND ROLLED TO 6" LAYERS(95% COMPACTION) CORE MATERIAL TO HAVE A PERMEABILITY OF 1X10^-4 CM/SEC AND THE FOLLOWING GRADATION.

PERCENT FINER	SIEVE SIZE
100	#4
30 TO 85	#40
20 TO 50	#200

(2) FILTER LAYER F2 EMBANKMENT MATERIAL SHALL CONFORM TO AASHTO M57 AND MEET THE FOLLOWING GRADATION:

PERCENT FINER	SIEVE SIZE
100	3 IN.
95-100	2 IN.
55-85	1 IN.
27-52	NO. 4
50 MAX.	NO. 40
25 MAX.	NO. 200

TYPICAL BASIN EMBANKMENT CROSS SECTION (4)
NOT TO SCALE

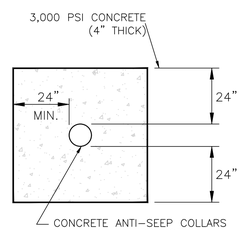

NOTE:

1. TO BE INSTALLED EQUIDISTANT FROM ENDS OF PIPE AND SPACED 20 FEET APART.

ANTI-SEEP COLLAR FOR BASIN OUTLET (5)
NOT TO SCALE

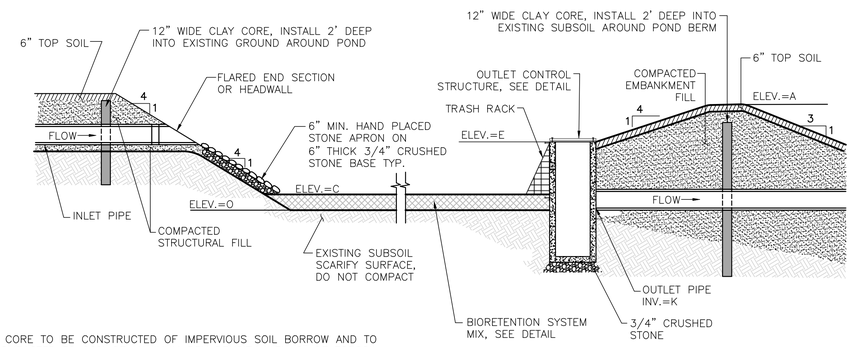

NOTES:

1. CLAY CORE TO BE CONSTRUCTED OF IMPERVIOUS SOIL BORROW AND TO BE COMPACTED TO 90% OF MAXIMUM DRY DENSITY WITH 6" OF TOPSOIL. BERM TO BE SEEDED. IMPERVIOUS CLAY CORE TO BE FREE OF PEAT STUMPS, BRUSH, ORGANIC SOILS AND OTHER DELETERIOUS MATERIALS. CORE MATERIAL TO HAVE MAXIMUM PERMEABILITY OF 1 x10^-4 CM/SEC
1. SIDE SLOPES TO BE SEEDED WITH NEW ENGLAND EROSION CONTROL.
2. PROJECT CIVIL ENGINEER SHALL PERFORM AN INSPECTION PRIOR TO THE PLACEMENT OF THE SEED MIX.

VEGETATED STORMWATER BASIN (6)
NOT TO SCALE

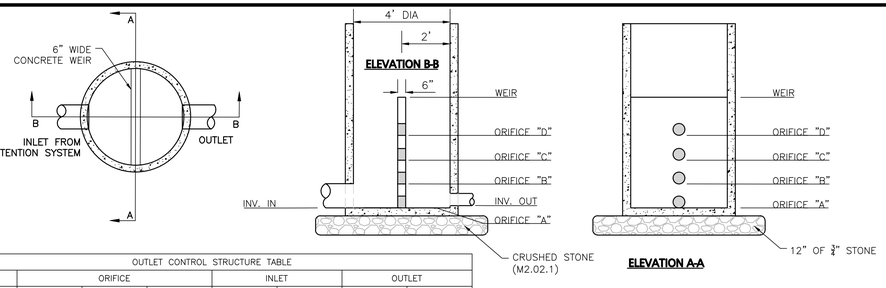

OUTLET CONTROL STRUCTURE TABLE							
	ORIFICE			INLET		OUTLET	
STRUCTURE	IDENTIFIER	DIAMETER	ELEV.	DIAMETER	INVERT ELEV.	DIAMETER	INVERT ELEV.
OCS-1 (DS-1A)	A	2" X 2	846.40	24"	846.50	15"	846.40
	B	6" X 2	848.10				
	C	5" X 2	849.40				
	D	5" X 2	850.70				
	WEIR	N/A	852.80				
OCS-2 (DS-2A)	A	4" X 2	892.00	24"	892.00	24"	892.00
	B	8"	895.40				
	C	8"	898.20				
	D	4"	899.90				
	WEIR	N/A	901.60				
OCS-5 (DS-1B)	A	4"	859.20	24"	859.20	12"	859.20
	WEIR	N/A	862.50				

NOTE:
1. MANHOLE TO MATCH LOCAL DPW STANDARDS

OUTLET CONTROL STRUCTURE (7)
NOT TO SCALE

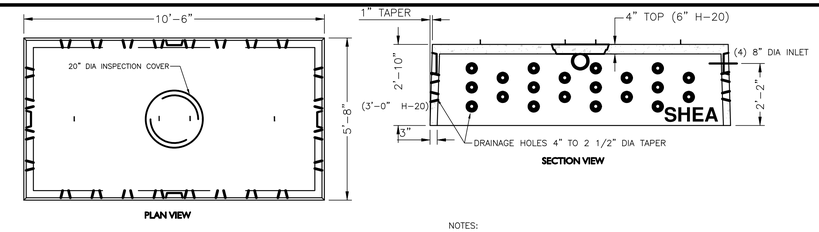

NOTES:
1. CONCRETE: 4,000 PSI MINIMUM AFTER 28 DAYS.
2. ALSO AVAILABLE IN AASHTO HS-20 LOADING.

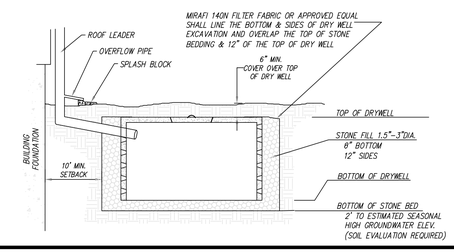

NOTES:

1. DRYWELLS SHALL BE INSTALLED IN STONE BED AS DEPICTED HEREON FOR EACH INDIVIDUAL STRUCTURE FOR STORMWATER RECHARGE, IN A LOCATION WHERE FIELD CONDITIONS MAKE IT POSSIBLE. EACH LOCATION SHALL BE EVALUATED BASED ON SITE SOIL EVALUATION OF THE ESTIMATED SEASONAL HIGH GROUNDWATER ELEVATION AT THE TIME OF LOT CONSTRUCTION.
2. THE DRYWELLS SHALL BE SHEA CONCRETE PRODUCTS 1000 GALLON SHALLOW RECTANGULAR OR APPROVED EQUAL.
3. THE DRYWELLS SHALL BE RATED FOR H20 LOADING.

ROOF DRAIN & DRYWELL CONNECTION DETAIL (8)
NOT TO SCALE

APPROVAL UNDER SITE PLAN APPROVAL REQUIRED. SUBJECT TO A COVENANT TO BE RECORDED HEREWITH.

DATE: _____

LEICESTER PLANNING BOARD

I CERTIFY THAT NO NOTICE OF APPEAL WAS RECEIVED DURING THE TWENTY (20) RECORDING DAYS NEXT AFTER RECEIPT AND OF NOTICE FROM THE PLANNING BOARD OF THE APPROVAL OF THIS PLAN

TOWN CLERK, TOWN OF LEICESTER

COMMONWEALTH OF MASSACHUSETTS MICHAEL A. MALYNOWSKI CIVIL No. 47269 REGISTERED PROFESSIONAL ENGINEER

Digitally signed by Michael Malynowski
Date: 2022.02.06 21:17:29 -05'00'

PROFESSIONAL ENGINEER FOR ALLEN & MAJOR ASSOCIATES, INC.

REV	DATE	DESCRIPTION
4	02-07-22	MISC. REVISIONS PER TOWN COMMENTS
3	12-14-21	MISC. REVISIONS PER TOWN COMMENTS
2	11-10-21	MISC. REVISIONS PER TOWN COMMENTS
1	10-05-21	MISC. REVISIONS PER TOWN COMMENTS

APPLICANT:
MKEP 770 LLC
265 SUNRISE HIGHWAY, SUITE 1368
ROCKVILLE CENTER, NY 11570

PROJECT:
SKYVIEW ESTATES
RESIDENTIAL DEVELOPMENT
MAIN STREET
LEICESTER, MA

PROJECT NO.	2889-01	DATE:	09-17-21
SCALE:	AS SHOWN	DWG. :	C-2889-01_Details
DESIGNED BY:	SM	CHECKED BY:	MAM

PREPARED BY:

ALLEN & MAJOR ASSOCIATES, INC.
civil engineering ♦ land surveying
environmental consulting ♦ landscape architecture
www.allenmajor.com
100 COMMERCE WAY, SUITE 5
WOBURN MA 01801
TEL: (781) 935-6889
FAX: (781) 935-2896
WOBURN, MA ♦ LAKEVILLE, MA ♦ MANCHESTER, NH

THIS DRAWING HAS BEEN PREPARED IN DIGITAL FORMAT. CLIENT/CLIENT'S REPRESENTATIVE OR CONSULTANTS MAY BE PROVIDED COPIES OF DRAWINGS AND SPECIFICATIONS FOR HIS/HER INFORMATION AND/OR SPECIFIC USE ON THIS PROJECT. DUE TO THE POTENTIAL THAT THE PROVIDED INFORMATION MAY BE MODIFIED UNINTENTIONALLY OR OTHERWISE, ALLEN & MAJOR ASSOCIATES, INC. MAY REMOVE ALL INDICATION OF THE DOCUMENT'S AUTHORSHIP ON THE DIGITAL MEDIA. PRINTED REPRESENTATIONS OR PORTABLE DOCUMENT FORMAT OF THE DRAWINGS AND SPECIFICATIONS ISSUED SHALL BE THE ONLY RECORD COPIES OF ALLEN & MAJOR ASSOCIATES, INC.'S WORK PRODUCT.

DRAWING TITLE: DETAILS

SHEET No. C-503

Copyright © 2022 Allen & Major Associates, Inc. All Rights Reserved

R:\PROJECTS\2889-01\CIVIL\DRAWINGS\CURRENT\C-2889-01_DETAILS.DWG

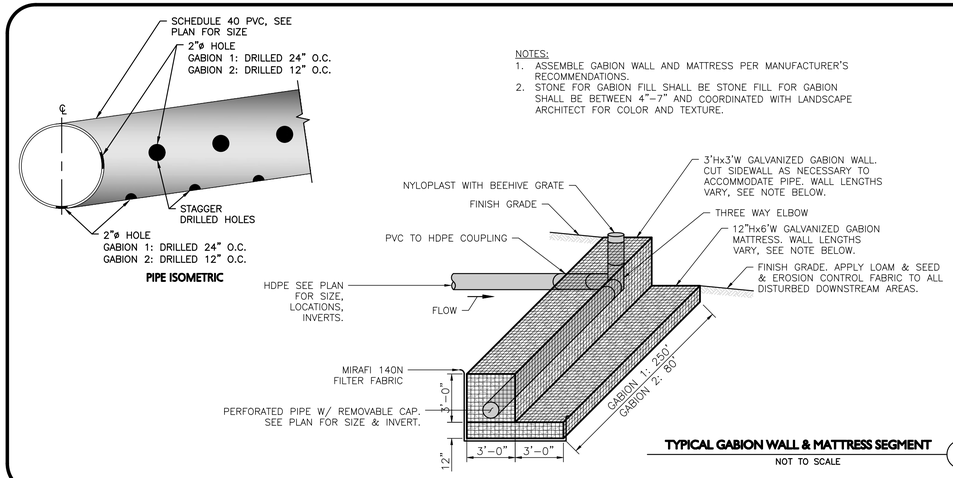

NOTES:
1. ASSEMBLE GABION WALL AND MATTRESS PER MANUFACTURER'S RECOMMENDATIONS.
2. STONE FOR GABION FILL SHALL BE STONE FILL FOR GABION SHALL BE BETWEEN 4"–7" AND COORDINATED WITH LANDSCAPE ARCHITECT FOR COLOR AND TEXTURE.

TYPICAL GABION WALL & MATTRESS SEGMENT (1)
NOT TO SCALE

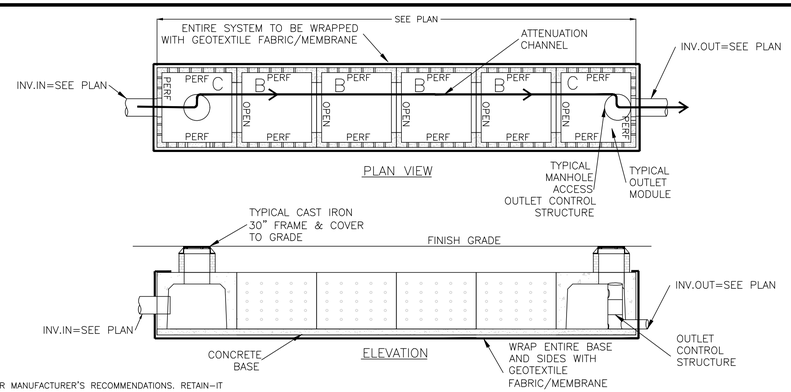

NOTES:
1. INSTALL PER MANUFACTURER'S RECOMMENDATIONS. RETAIN–IT DETAILS ARE PROTOTYPICAL.
2. TREATMENT OF TSS TO BE PROVIDED BY ADVANCED SEDIMENTATION WITHIN RETAIN–IT MODULES.
3. CONTRACTOR SHALL PROVIDE SHOP DRAWINGS FOR REVIEW AND APPROVAL.
4. SHOP DRAWINGS SHALL INCLUDE BUOYANCY CALCULATIONS STAMPED BY A PE LICENSED IN THE COMMONWEALTH OF MASSACHUSETTS.
5. STRUCTURES TO BE H20 LOAD RATED.

RETAIN-IT STORMWATER DETENTION SYSTEM (2)
NOT TO SCALE

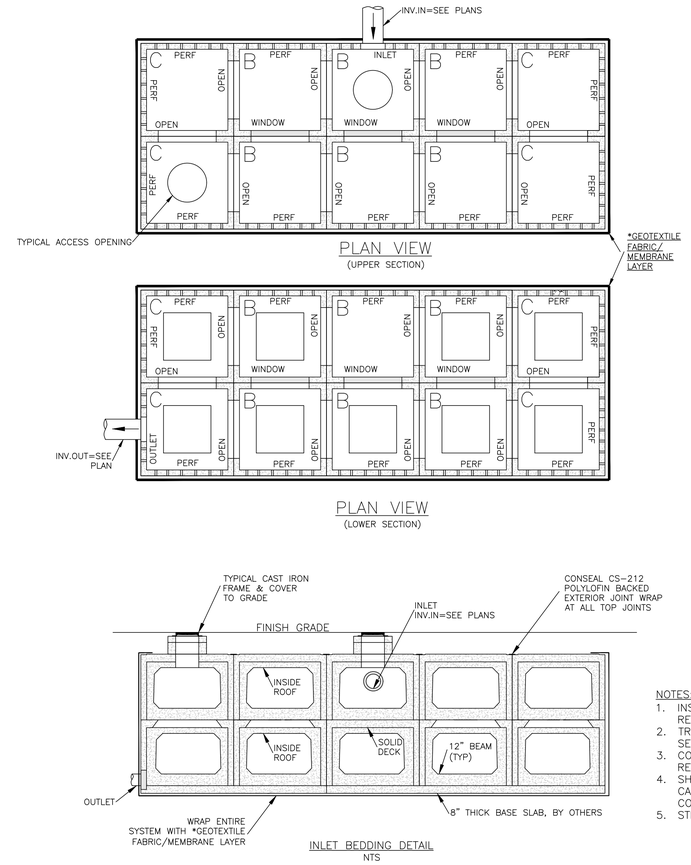

NOTES:
1. INSTALL PER MANUFACTURER'S RECOMMENDATIONS. RETAIN–IT DETAILS ARE PROTOTYPICAL.
2. TREATMENT OF TSS TO BE PROVIDED BY ADVANCED SEDIMENTATION WITHIN RETAIN–IT MODULES.
3. CONTRACTOR SHALL PROVIDE SHOP DRAWINGS FOR REVIEW AND APPROVAL.
4. SHOP DRAWINGS SHALL INCLUDE BUOYANCY CALCULATIONS STAMPED BY A PE LICENSED IN THE COMMONWEALTH OF MASSACHUSETTS.
5. STRUCTURES TO BE H20 LOAD RATED.

RETAIN-IT STACKED STORMWATER DETENTION SYSTEM (3)
NOT TO SCALE

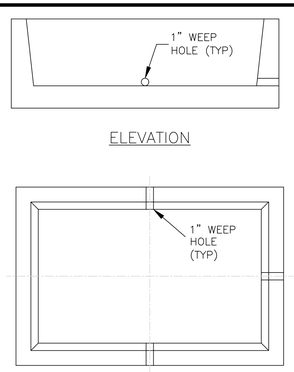

NOTES:
1. INSTALL PER MANUFACTURER'S RECOMMENDATIONS. RETAIN–IT DETAILS ARE PROTOTYPICAL.
2. TREATMENT OF TSS TO BE PROVIDED BY ADVANCED SEDIMENTATION WITHIN RETAIN–IT MODULES.
3. CONTRACTOR SHALL PROVIDE SHOP DRAWINGS FOR REVIEW AND APPROVAL.

RETAIN-IT ANTI-SCOUR DEVICE (4)
NOT TO SCALE

CONSTRUCTION NOTES:

1. THE SUBGRADE FOR THE FILTER MATERIAL, GEOTEXTILE FABRIC, AND RIPRAP SHALL BE PREPARED TO THE LINES AND GRADES SHOWN ON THE PLANS.
2. THE ROCK OR GRAVEL USED FOR FILTER OR RIPRAP SHALL CONFORM TO THE SPECIFIED GRADATION.
3. GEOTEXTILE FABRICS SHALL BE PROTECTED FROM PUNCTURE OR TEARING DURING THE PLACEMENT OF THE ROCK RIPRAP. DAMAGED AREAS IN THE FABRIC SHALL BE REPAIRED BY PLACING A PIECE OF FABRIC OVER THE DAMAGED AREA OR BY COMPLETE REPLACEMENT OF THE FABRIC. ALL OVERLAPS REQUIRED FOR REPAIRS OR JOINING TWO PIECES OF FABRIC SHALL BE A MINIMUM OF 12 INCHES.
4. STONE FOR THE RIPRAP MAY BE PLACED BY EQUIPMENT AND SHALL BE CONSTRUCTED TO THE FULL LAYER THICKNESS IN ONE OPERATION AND IN SUCH A MANNER AS TO PREVENT SEGREGATION OF THE STONE SIZES.
5. THE MEDIAN STONE DIAMETER FOR THE RIPRAP APRON IS d50. FIFTY PERCENT BY WEIGHT OF THE RIPRAP MIXTURE SHALL BE SMALLER THAN THE MEDIAN STONE SIZE. THE LARGEST STONE SIZE IN THE MIXTURE SHALL BE 1.5 TIMES THE d50.

MAINTENANCE

1. THE OUTLET PROTECTION SHOULD BE CHECKED AT LEAST ANNUALLY AND AFTER EVERY MAJOR STORM WITHIN THE GROWING STABILIZATION PERIOD. IF THE RIPRAP HAS BEEN DISPLACED, UNDERMINED OR DAMAGED, IT SHOULD BE REPAIRED IMMEDIATELY. THE CHANNEL IMMEDIATELY BELOW THE OUTLET SHOULD BE CHECKED TO SEE THAT EROSION IS NOT OCCURRING. THE DOWNSTREAM CHANNEL SHOULD BE KEPT CLEAR OF OBSTRUCTIONS SUCH AS FALLEN TREES, DEBRIS, AND SEDIMENT THAT COULD CHANGE FLOW PATTERNS AND/OR TAILWATER DEPTHS ON THE PIPES. REPAIRS MUST BE CARRIED OUT IMMEDIATELY TO AVOID ADDITIONAL DAMAGE TO THE OUTLET PROTECTION APRON.

OUTLET	D (inches)	W1 (feet)	W2 (feet)	L (feet)	D_{50} (inches)	D_t (inches)
FES–01	30	7.5	34.0	26.5	8	18

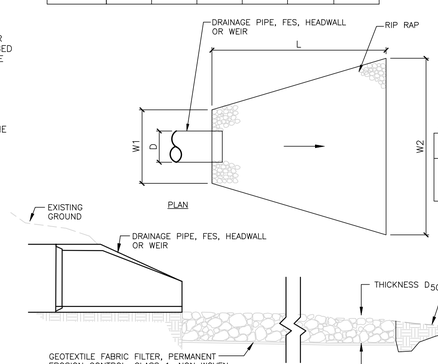

8" (D_{50}) ROCK RIP RAP GRADATION

% OF WEIGHT SMALLER THAN THE GIVEN SIZE	SIZE OF STONE IN INCHES
100	12.2 TO 16.2
85	10.5 TO 14.6
50	8.1 TO 12.2
15	2.4 TO 4.1

STONE LINED OUTLET PROTECTION (5)
NOT TO SCALE

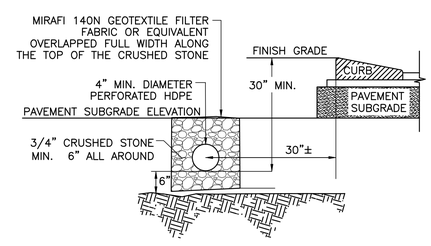

NOTES:
1. UNDERDRAIN TO BE PLACED IN LOCATIONS OF CUT AND WHERE GRAVEL ROAD BASE WILL BE BELOW EXISTING GRADE.
2. THE UNDERDRAIN SHALL CONSIST OF A 4 INCH DIAMETER PERFORATED HDPE PIPE SURROUNDED WITH AT LEAST 6 INCHES OF 3/4" STONE ALONG THE SIDES AND BOTTOM OF THE PIPE. CRUSHED STONE OVER THE TOP OF PIPE SHALL EXTEND UP TO THE PROPOSED PAVEMENT SUBGRADE ELEVATION.
3. THE CRUSHED STONE SHALL BE WRAPPED IN FILTER FABRIC (MIRAFI 140N OR APPROVED EQUAL) AND OVERLAPPED FULL WIDTH ON THE TOP.
4. THE PIPE SHALL BE LAID FLAT AND SHALL CONNECT TO A SOLID PIPE BEFORE GOING UNDER ANY PAVEMENT AREAS.
5. THE BOTTOM OF THE PIPE SHALL BE AT LEAST 30 INCHES BELOW THE PROPOSED FINISH GRADE.

ROADWAY UNDERDRAIN (5)
NOT TO SCALE

APPROVAL UNDER SITE PLAN APPROVAL REQUIRED. SUBJECT TO A COVENANT TO BE RECORDED HEREWITH.

DATE: _____

LEICESTER PLANNING BOARD

I CERTIFY THAT NO NOTICE OF APPEAL WAS RECEIVED DURING THE TWENTY (20) RECORDING DAYS NEXT AFTER RECEIPT AND OF NOTICE FROM THE PLANNING BOARD OF THE APPROVAL OF THIS PLAN

TOWN CLERK, TOWN OF LEICESTER

COMMONWEALTH OF MASSACHUSETTS
MICHAEL A. MALYNOWSKI
CIVIL
No. 47269
REGISTERED PROFESSIONAL ENGINEER

Digitally signed by Michael Malynowski
Date: 2022.02.06 21:17:29 -05'00'

PROFESSIONAL ENGINEER FOR
ALLEN & MAJOR ASSOCIATES, INC.

REV	DATE	DESCRIPTION
4	02-07-22	MISC. REVISIONS PER TOWN COMMENTS
3	12-14-21	MISC. REVISIONS PER TOWN COMMENTS
2	11-10-21	MISC. REVISIONS PER TOWN COMMENTS
1	10-05-21	MISC. REVISIONS PER TOWN COMMENTS

APPLICANT:
MKEP 770 LLC
265 SUNRISE HIGHWAY, SUITE 1368
ROCKVILLE CENTER, NY 11570

PROJECT:
SKYVIEW ESTATES
RESIDENTIAL DEVELOPMENT
MAIN STREET
LEICESTER, MA

PROJECT NO.	2889-01	DATE:	09-17-21
SCALE:	AS SHOWN	DWG. :	C-2889-01_Details
DESIGNED BY:	SM	CHECKED BY:	MAM

PREPARED BY:

ALLEN & MAJOR ASSOCIATES, INC.
civil engineering ♦ land surveying
environmental consulting ♦ landscape architecture
www.allenmajor.com
100 COMMERCE WAY, SUITE 5
WOBURN MA 01801
TEL: (781) 935-6889
FAX: (781) 935-2896
WOBURN, MA ♦ LAKEVILLE, MA ♦ MANCHESTER, NH

THIS DRAWING HAS BEEN PREPARED IN DIGITAL FORMAT. CLIENT/CLIENT'S REPRESENTATIVE OR CONSULTANTS MAY BE PROVIDED COPIES OF DRAWINGS AND SPECIFICATIONS FOR HIS/HER INFORMATION AND/OR SPECIFIC USE ON THIS PROJECT. DUE TO THE POTENTIAL THAT THE PROVIDED INFORMATION MAY BE MODIFIED UNINTENTIONALLY OR OTHERWISE, ALLEN & MAJOR ASSOCIATES, INC. MAY REMOVE ALL INDICATION OF THE DOCUMENT'S AUTHORSHIP ON THE DIGITAL MEDIA. PRINTED REPRESENTATIONS OR PORTABLE DOCUMENT FORMAT OF THE DRAWINGS AND SPECIFICATIONS ISSUED SHALL BE THE ONLY RECORD COPIES OF ALLEN & MAJOR ASSOCIATES, INC.'S WORK PRODUCT.

DRAWING TITLE: DETAILS

SHEET No. C-504

Copyright © 2022 Allen & Major Associates, Inc.
All Rights Reserved

R:\PROJECTS\2889-01\CIVIL\DRAWINGS\CURRENT\C-2889-01_DETAILS.DWG

NOTES:

1. MINIMUM BURIAL DEPTH (FINISH GRADE TO TOP OF PIPE)
   GRAVITY PIPE (SEWER & DRAIN) – SEE PLAN OR PROFILE
   PRESSURE PIPE UNDER PAVING – 4'
   PRESSURE PIPE BENEATH UNPAVED – 3'
   WATER PIPE – 5'
2. WHERE BACKFILL IS DESIGNATED AS COMPACTED, THIS MEANS 90 TO 95% STANDARD PROCTOR. AASHTO T–99. ALL FILL PLACED BELOW PIPES AND STRUCTURES MUST MEET THIS REQUIREMENT.
3. TRENCHES WITHIN PUBLIC RIGHT OF WAY MAY REQUIRE FLOWABLE FILL. VERIFY WITH MUNICIPAL ENGINEER.
4. WHERE WASTE FILLS ARE ENCOUNTERED AT SUBGRADE LEVEL FOR NEW UTILITIES, THE FILL SHOULD BE OVER–EXCAVATED, THE SUBGRADE SHOULD BE RE–COMPACTED, AND BACKFILL CONSISTING OF PIPE BEDDING MATERIAL, CRUSHED STONE OR OTHER SUITABLE GRANULAR FILL SHOULD BE PLACED TO A SUFFICIENT DEPTH TO CREATE A FIRM AND STABLE SUBGRADE (TYPICALLY 12 TO 18 INCHES OVER–EXCAVATION).

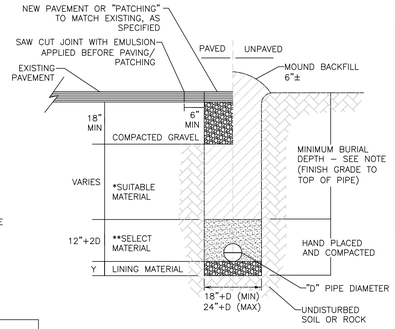

CONDITION & PIPE	**SELECT MATERIAL	LINING MATERIAL	Y DIMENSION
DUCTILE IRON "ORDINARY SOIL"	TYPE I, II, OR III	SAND OR TYPE III	3"
RCP "ORDINARY SOIL"	TYPE II OR III	SAND OR TYPE III	3"
ALL PIPE OVER BEDROCK OR LEDGE	TYPE II OR III	SAND OR TYPE III	8"
DUCTILE IRON IN ORDINARY SOIL OR MUCK	TYPE II OR III	SAND	4"
RCP IN CLAY	TYPE II OR III	SAND	8"
ALL PLASTICS	TYPE III	SAND OR TYPE III	6"

* SUITABLE MATERIAL SHALL CONTAIN NO STONE GREATER THAN 3" IN DIAMETER, NO FROZEN LUMPS, AND ONLY MINOR AMOUNTS OF CLAY OR ORGANIC MATERIAL. ALL MATERIAL TO BE PLACED IN MAX 12" LIFTS AND COMPACTED BEFORE PLACING NEXT LIFT.

**TYPE I MATERIAL SHALL BE EITHER GRAVEL OR EXCAVATED MATERIAL CONTAINING NO STONES GREATER THAN 1.5" DIAMETER, NO FROZEN LUMPS, CLAY OR ORGANIC MATERIAL.

**TYPE II MATERIAL SHALL BE CLEAN, HARD, CRUSHED OR NATURAL STONE WITH A GRADATION BY WEIGHT OF 100% PASSING A 1.5" SQUARE OPENING, NOT MORE THAN 25% PASSING A ¾" OPENING, AND NOT MORE THAN 5% PASSING A ¼" SQUARE OPENING.

**TYPE III MATERIAL SHALL BE CLEAN, HARD, CRUSHED STONE FREE FROM COATINGS AND THOROUGHLY WASHED WITH A GRADATION BY WEIGHT OF 100% PASSING A 1" SQUARE OPENING, AND 0 TO 5% PASSING A ¼" SQUARE OPENING.

FILTER FABRIC USE

	SOIL TYPE	
	SILT OR CLAY	GRANULAR SOIL
ABOVE GROUND WATER	FILTER FABRIC NOT REQUIRED	FILTER FABRIC NOT REQUIRED
BELOW GROUND WATER	FILTER FABRIC REQUIRED	FILTER FABRIC NOT REQUIRED

TRENCH DETAIL
NOT TO SCALE
1

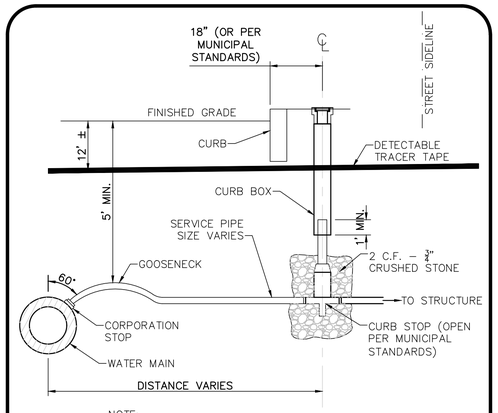

NOTE:
WATER SERVICES LARGER THAN 1" ARE TO BE RESTRAINED TO WATER MAIN W/ APPROVED SADDLE.

TYPICAL WATER SERVICE CONNECTION
NOT TO SCALE
2

NOTES:
1. ALL WATER MAIN FITTINGS, BENDS, TEES, PLUGS ETC. SHALL BE RESTRAINED W/ THRUST BLOCKS EXCEPT WHERE NOTED.
2. ALL THRUST BLOCKS & COLLARS SHALL BE INSTALLED SO THAT THEY BEAR AGAINST UNDISTURBED EARTH.
3. SIZE OF CONCRETE THRUST BLOCKS SHALL BE AS NOTED BELOW.
4. MINIMUM COMPRESSIVE STRENGTH OF THRUST BLOCK CONCRETE SHALL BE 3,000 P.S.I.
5. KEEP CONCRETE CLEAR OF MECHANICAL JOINTS.
6. THE BELOW PREDICATED ON A WATER PRESSURE OF 225 PSI AND A SOIL RESISTANCE OF 2000 PSF (TILL). FOR OTHER SOILS THE VALUES IN THE ABOVE TABLE SHALL BE MULTIPLIED BY:

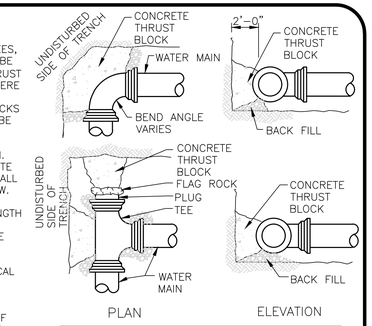

MINIMUM THRUST BLOCK BEARING AREAS				
PIPE ø	90° BEND (SQ. FT.)	45° BEND (SQ. FT.)	22.5° BEND (SQ. FT.)	TEES, PLUGS, CAPS & HYD. (SQ.FT.)
6"	5	3	3	4
8"	9	6	3	9
10"	13	7	4	12
12"	20	10	5	16

THRUST BLOCK DETAILS
NOT TO SCALE
3

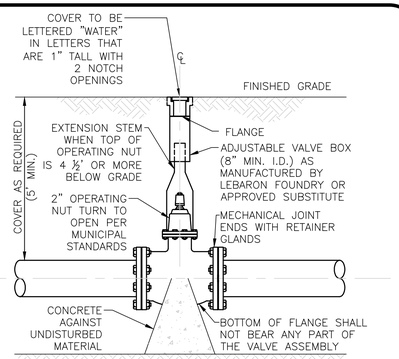

NOTE:
1.) CONTRACTOR MAY USE ANCHOR TEES AT HIS OPTION.
2.) HYDRANTS AND VALVES TO OPERATE PER MUNICIPAL STANDARDS

GATE VALVE DETAIL
NOT TO SCALE
4

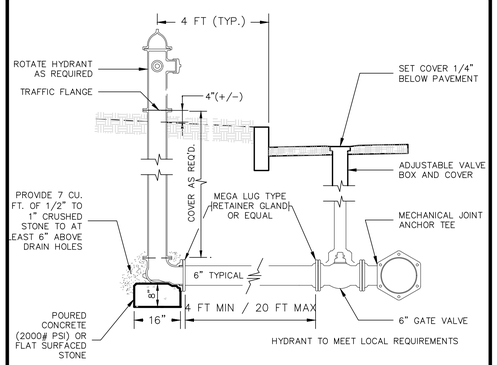

HYDRANT SETTING DETAIL
NOT TO SCALE
5

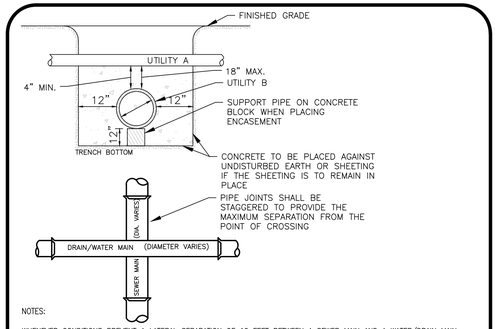

NOTES:

WHENEVER CONDITIONS PREVENT A LATERAL SEPARATION OF 10 FEET BETWEEN A SEWER MAIN AND A WATER/DRAIN MAIN:

1. THE WATER/DRAIN MAIN SHALL BE LAID IN A SEPARATE TRENCH AND THE DIFFERENCE IN ELEVATION BETWEEN THE WATER/DRAIN MAIN AND THE SEWER MAIN SHALL BE AT LEAST 18 INCHES.
2. THE PIPE CROSSING SHALL OCCUR AS CLOSE TO 90° AS PRACTICABLE.
3. THE PIPE JOINTS SHALL BE STAGGERED TO PROVIDE THE MAXIMUM SEPARATION FROM THE POINT OF CROSSING.
4. THE CROSSING SHALL BE ENCASED IN CONCRETE FOR THE ENTIRE WIDTH OF THE TRENCH AND FOR A DISTANCE OF 10 LINEAR FEET CENTERED ON THE CROSSING.
5. UTILITIES A AND B CAN BE EITHER NEW OR EXISTING.
6. WHEN ONE UTILITY IS A SANITARY SEWER, IT IS PREFERABLE TO BE POSITIONED AS SHOWN FOR UTILITY B.
7. ENCASEMENT EXTENDS 10'–0" ON EACH SIDE OF THE CENTERLINE OF UTILITY A.
8. PIPE MUST BE BRACED VERTICALLY AND HORIZONTALLY TO PREVENT FLOATATION DURING PLACEMENT OF CONCRETE.

SEWER, WATER/DRAIN CROSSING DETAIL
NOT TO SCALE
6

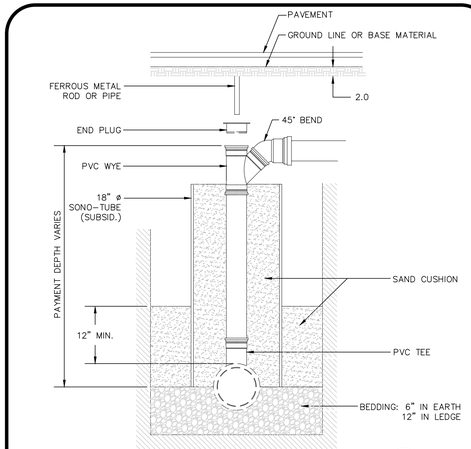

SERVICE CHIMNEY FOR PVC PIPE
NOT TO SCALE
7

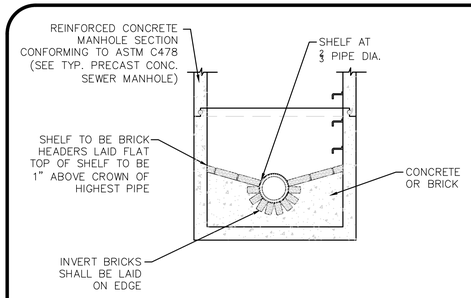

NOTES:

1. INVERT AND SHELF TO BE PLACED AFTER LEAKAGE TEST.
2. MANHOLES SHALL HAVE A BRICK PAVED SHELF AND INVERT, CONSTRUCTED TO CONFORM TO THE SIZE OF PIPE AND FLOW. AT CHANGES IN DIRECTION, THE INVERTS SHALL BE LAID OUT IN CURVES OF THE LONGEST RADIUS POSSIBLE TANGENT TO THE CETER LINE OF THE HIGHEST PIPE CROWN AND SLOPE TO DRAIN TOWARD THE FLOWING THROUGH CHANNEL. UNDERLAYMENT OF INVERT AND SHELF SHALL CONSIST OF CEMENT CONCRETE OR BRICK IN MORTAR.

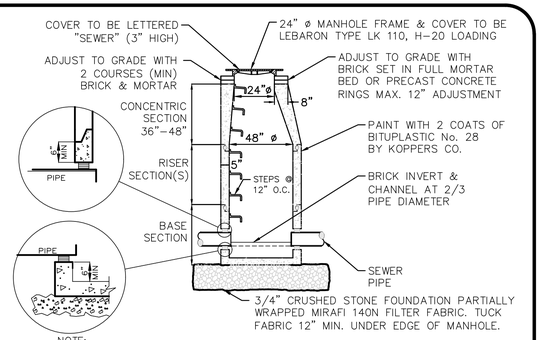

NOTE:
THE MANHOLE, INCLUDING ALL COMPONENT PARTS, SHALL HAVE ADEQUATE SPACE, STRENGTH AND LEAK PROOF QUALITIES CONSIDERED NECESSARY FOR THE INTENDED SERVICE SPACE REQUIREMENT AND CONFIGURATIONS SHALL BE AS SHOWN ON THE DRAWING. MANHOLES MAY BE AN ASSEMBLY OR PRECAST SECTIONS, WITH OR WITHOUT STEEL REINFORCEMENT, WITH ADEQUATE JOINTING OR CONCRETE CAST MONOLITHICALLY IN PLACE WITH OR WITHOUT REINFORCEMENT. IN ANY APPROVED MANHOLE, THE COMPLETE STRUCTURE SHALL BE OF SUCH MATERIAL AND QUALITY AS TO WITHSTAND LOADS OF 8 TONS (H–20 LOADING) WITHOUT FAILURE AND PREVENT LEAKAGE IN EXCESS OF ONE GALLON PER DAY PER VERTICAL FOOT OF MANHOLE.

PRECAST CONCRETE SEWER MANHOLE (SMH)
NOT TO SCALE
8

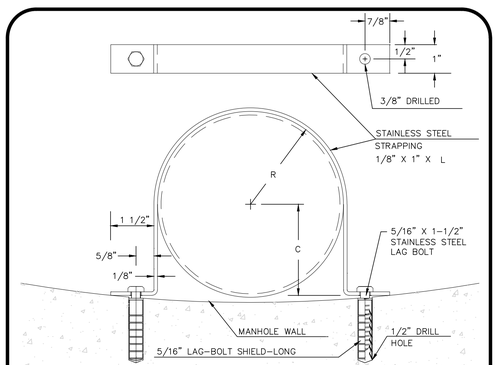

PIPE SIZE	L	R	C
4"	14.176"	2.125"	2.063"
6"	19.638"	3.188"	3.125"
8"	25.102"	4.250"	4.188"

STRAP DETAIL FOR INSIDE DROP CONNECTION
NOT TO SCALE
9

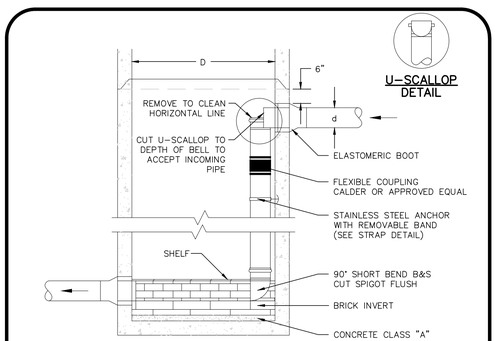

# OF DROPS	d	D
1	8"	4'
2	8" OR 10"	5'
1	12"	5'
1	15"	5'

INSIDE DROP CONNECTION FOR PVC PIPE
NOT TO SCALE
10

R:\PROJECTS\2889-01\CIVIL\DRAWINGS\CURRENT\C-2889-01_DETAILS.DWG

APPROVAL UNDER SITE PLAN APPROVAL REQUIRED. SUBJECT TO A COVENANT TO BE RECORDED HEREWITH.

DATE: _____

LEICESTER PLANNING BOARD

I CERTIFY THAT NO NOTICE OF APPEAL WAS RECEIVED DURING THE TWENTY (20) RECORDING DAYS NEXT AFTER RECEIPT AND OF NOTICE FROM THE PLANNING BOARD OF THE APPROVAL OF THIS PLAN

TOWN CLERK, TOWN OF LEICESTER

COMMONWEALTH OF MASSACHUSETTS
MICHAEL A. MALYNOWSKI
CIVIL
No. 47269
REGISTERED PROFESSIONAL ENGINEER

Digitally signed by Michael Malynowski
Date: 2022.02.06 21:17:29 -05'00'

PROFESSIONAL ENGINEER FOR
ALLEN & MAJOR ASSOCIATES, INC.

REV	DATE	DESCRIPTION
4	02-07-22	MISC. REVISIONS PER TOWN COMMENTS
3	12-14-21	MISC. REVISIONS PER TOWN COMMENTS
2	11-10-21	MISC. REVISIONS PER TOWN COMMENTS
1	10-05-21	MISC. REVISIONS PER TOWN COMMENTS

APPLICANT:
MKEP 770 LLC
265 SUNRISE HIGHWAY, SUITE 1368
ROCKVILLE CENTER, NY 11570

PROJECT:
SKYVIEW ESTATES
RESIDENTIAL DEVELOPMENT
MAIN STREET
LEICESTER, MA

PROJECT NO.	2889-01	DATE:	09-17-21
SCALE:	AS SHOWN	DWG. :	C-2889-01_Details
DESIGNED BY:	SM	CHECKED BY:	MAM

PREPARED BY:
ALLEN & MAJOR ASSOCIATES, INC.
civil engineering ♦ land surveying
environmental consulting ♦ landscape architecture
www.allenmajor.com
100 COMMERCE WAY, SUITE 5
WOBURN MA 01801
TEL: (781) 935-6889
FAX: (781) 935-2896
WOBURN, MA ♦ LAKEVILLE, MA ♦ MANCHESTER, NH

THIS DRAWING HAS BEEN PREPARED IN DIGITAL FORMAT. CLIENT/CLIENT'S REPRESENTATIVE OR CONSULTANTS MAY BE PROVIDED COPIES OF DRAWINGS AND SPECIFICATIONS FOR HIS/HER INFORMATION AND/OR SPECIFIC USE ON THIS PROJECT. DUE TO THE POTENTIAL THAT THE PROVIDED INFORMATION MAY BE MODIFIED UNINTENTIONALLY OR OTHERWISE, ALLEN & MAJOR ASSOCIATES, INC. MAY REMOVE ALL INDICATION OF THE DOCUMENT'S AUTHORSHIP ON THE DIGITAL MEDIA. PRINTED REPRESENTATIONS OR PORTABLE DOCUMENT FORMAT OF THE DRAWINGS AND SPECIFICATIONS ISSUED SHALL BE THE ONLY RECORD COPIES OF ALLEN & MAJOR ASSOCIATES, INC.'S WORK PRODUCT.

DRAWING TITLE: DETAILS

SHEET No. C-505

Copyright © 2022 Allen & Major Associates, Inc.
All Rights Reserved

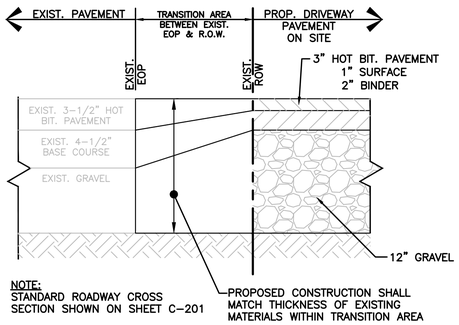

PAVEMENT TRANSITION (1)
NOT TO SCALE

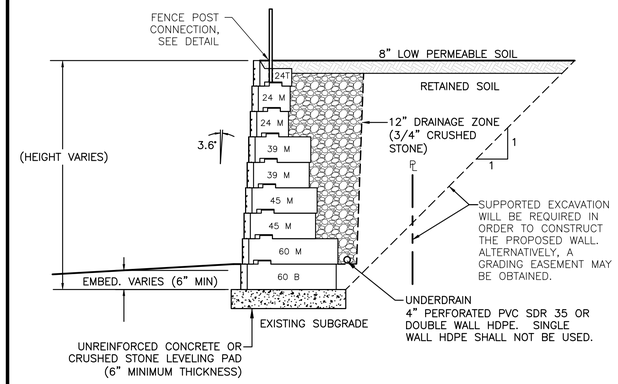

NOTES:

1. BLOCK WALL SHALL BE RECON® RETAINING WALL SYSTEMS OR APPROVED EQUAL.
2. VENDOR INFORMATION:
   SHEA WALL SYSTEM INC.
   87 HAVERHILL STREET
   AMESBURY, MA 01913
   PHONE: 800-696-7432
   www.sheaconcrete.com
3. RECON BLOCK STYLE SHALL BE "NORTH SHORE GRANITE".
4. THE CONTRACTOR SHALL SUBMIT SHOP DRAWINGS AND WALL CALCULATIONS, PREPARED AND ENDORSED BY A MA REGISTERED PROFESSIONAL ENGINEER, TO THE ENGINEER-OF-RECORD FOR APPROVAL AND TO THE TOWN FOR THEIR FILES.
5. SEE GRADING PLANS FOR WALL LAYOUT AND HEIGHTS.
6. SHORING, IF USED, WOULD REQUIRE A FORMAL SUBMITTAL, STAMPED BY A GEOTECHNICAL ENGINEER.
7. CONTRACTOR SHALL STABILIZE AND OTHERWISE PROTECT ABUTTING PROPERTIES FROM SUBSIDENCE, OR OTHER PROPERTY DAMAGE RESULTING FROM EXCAVATION, RETAINING WALL CONSTRUCTION, OR OTHER CONTRACTOR OPERATIONS.

BLOCK RETAINING WALL SECTION (2)
NOT TO SCALE

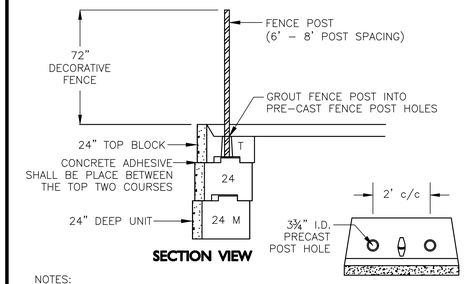

NOTES:

1. BLOCK WALL SHALL BE RECON® RETAINING WALL SYSTEMS OR APPROVED EQUAL.
2. VENDOR INFORMATION:
   SHEA WALL SYSTEM INC.
   87 HAVERHILL STREET
   AMESBURY, MA 01913
   PHONE: 800-696-7432
   www.sheaconcrete.com

FENCE CONNECTION TO TOP OF WALL (3)
NOT TO SCALE

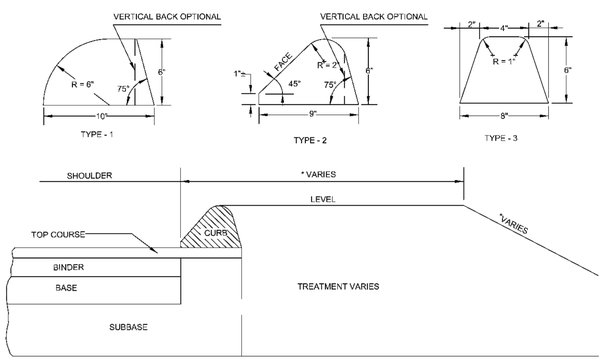

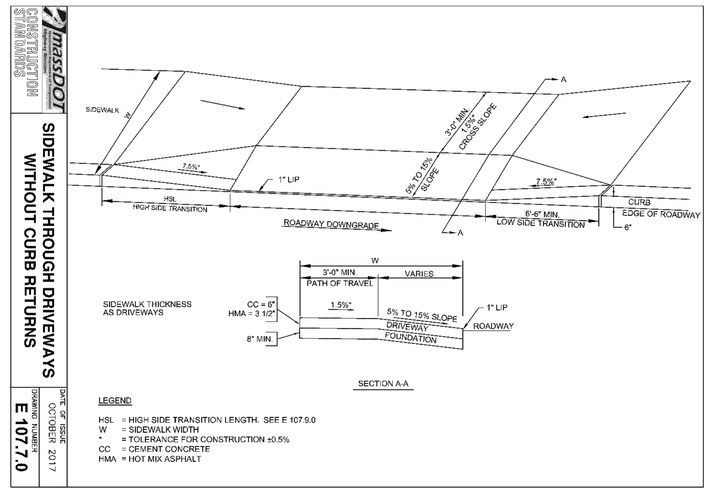

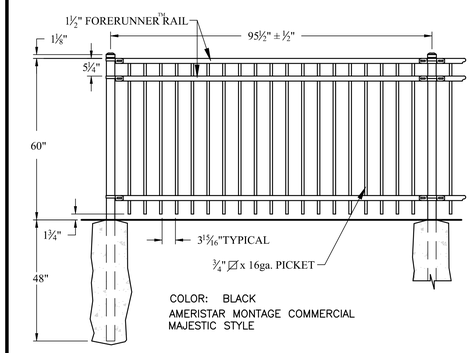

DECORATIVE STEEL FENCE (4)
NOT TO SCALE

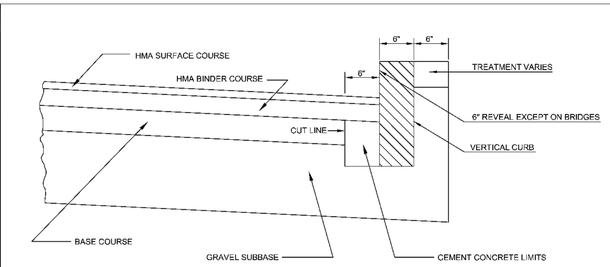

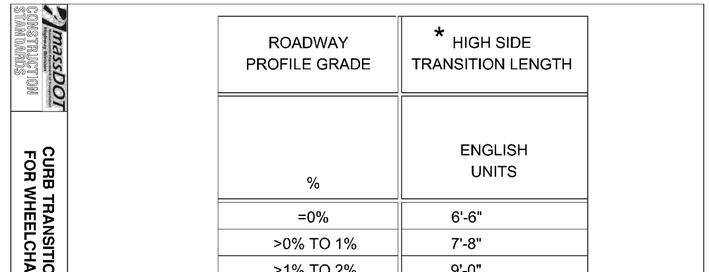

ROADWAY PROFILE GRADE	* HIGH SIDE TRANSITION LENGTH
%	ENGLISH UNITS
=0%	6'-6"
>0% TO 1%	7'-8"
>1% TO 2%	9'-0"
>2% TO 3%	11'-0"
>3% TO 4%	14'-0"
>4% TO 5%	15'-0" Max

NOTE:

* BASED ON A DESIGN SLOPE OF 7.5% AND A REVEAL OF 6".

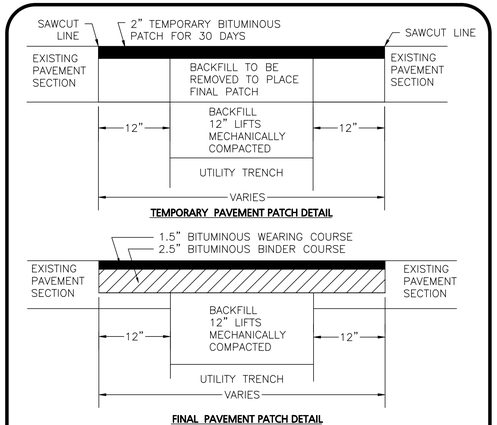

PAVEMENT TRENCH PATCH DETAIL (3)
NOT TO SCALE

APPROVAL UNDER SITE PLAN APPROVAL REQUIRED. SUBJECT TO A COVENANT TO BE RECORDED HEREWITH.

DATE: _____

LEICESTER PLANNING BOARD

I CERTIFY THAT NO NOTICE OF APPEAL WAS RECEIVED DURING THE TWENTY (20) RECORDING DAYS NEXT AFTER RECEIPT AND OF NOTICE FROM THE PLANNING BOARD OF THE APPROVAL OF THIS PLAN

TOWN CLERK, TOWN OF LEICESTER

COMMONWEALTH OF MASSACHUSETTS
MICHAEL A. MALYNOWSKI
CIVIL
No. 47269
REGISTERED PROFESSIONAL ENGINEER

Digitally signed by Michael Malynowski
Date: 2022.02.06 21:17:29 -05'00'

PROFESSIONAL ENGINEER FOR
ALLEN & MAJOR ASSOCIATES, INC.

REV	DATE	DESCRIPTION
4	02-07-22	MISC. REVISIONS PER TOWN COMMENTS
3	12-14-21	MISC. REVISIONS PER TOWN COMMENTS
2	11-10-21	MISC. REVISIONS PER TOWN COMMENTS
1	10-05-21	MISC. REVISIONS PER TOWN COMMENTS

APPLICANT:
MKEP 770 LLC
265 SUNRISE HIGHWAY, SUITE 1368
ROCKVILLE CENTER, NY 11570

PROJECT:
SKYVIEW ESTATES
RESIDENTIAL DEVELOPMENT
MAIN STREET
LEICESTER, MA

PROJECT NO.	2889-01	DATE:	09-17-21
SCALE:	AS SHOWN	DWG. :	C-2889-01_Details
DESIGNED BY:	SM	CHECKED BY:	MAM

PREPARED BY:
ALLEN & MAJOR ASSOCIATES, INC.
civil engineering ♦ land surveying
environmental consulting ♦ landscape architecture
www.allenmajor.com
100 COMMERCE WAY, SUITE 5
WOBURN MA 01801
TEL: (781) 935-6889
FAX: (781) 935-2896
WOBURN, MA ♦ LAKEVILLE, MA ♦ MANCHESTER, NH

THIS DRAWING HAS BEEN PREPARED IN DIGITAL FORMAT. CLIENT/CLIENT'S REPRESENTATIVE OR CONSULTANTS MAY BE PROVIDED COPIES OF DRAWINGS AND SPECIFICATIONS FOR HIS/HER INFORMATION AND/OR SPECIFIC USE ON THIS PROJECT. DUE TO THE POTENTIAL THAT THE PROVIDED INFORMATION MAY BE MODIFIED UNINTENTIONALLY OR OTHERWISE, ALLEN & MAJOR ASSOCIATES, INC. MAY REMOVE ALL INDICATION OF THE DOCUMENT'S AUTHORSHIP ON THE DIGITAL MEDIA. PRINTED REPRESENTATIONS OR PORTABLE DOCUMENT FORMAT OF THE DRAWINGS AND SPECIFICATIONS ISSUED SHALL BE THE ONLY RECORD COPIES OF ALLEN & MAJOR ASSOCIATES, INC.'S WORK PRODUCT.

DRAWING TITLE: DETAILS

SHEET No. C-506

Copyright © 2022 Allen & Major Associates, Inc.
All Rights Reserved

R:\PROJECTS\2889-01\CIVIL\DRAWINGS\CURRENT\C-2889-01_DETAILS.DWG

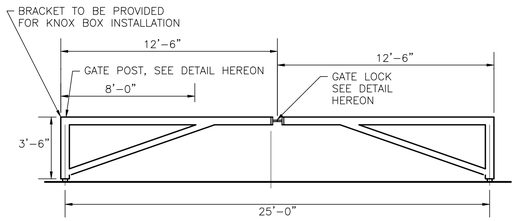

GATE ELEVATION
NOT TO SCALE

NOTES:
1. ALL STEEL TUBING TO BE SCHEDULE 80 GALVANIZED STEEL.
2. PROVIDE FULL WELD ON ALL JOINTS.
3. ALL WELDS SHALL BE PAINTED WITH A GRAY COLOR TO MATCH THE GALVANIZED STEEL.
4. CONTRACTOR SHALL SUBMIT SHOP DRAWINGS TO OWNER/ENGINEER FOR REVIEW PRIOR TO FABRICATION.

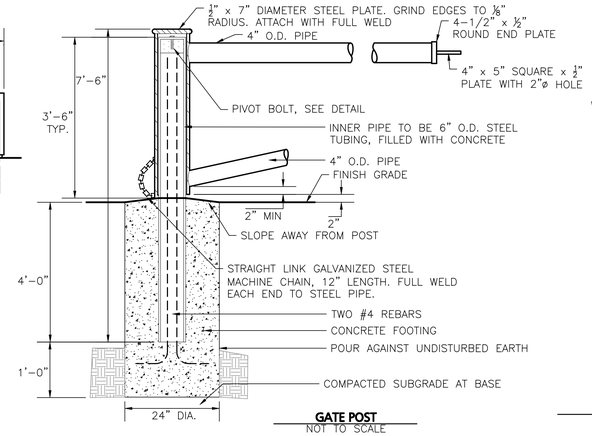

GATE POST
NOT TO SCALE

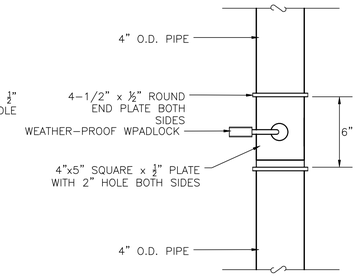

GATE LOCK PLAN VIEW
NOT TO SCALE

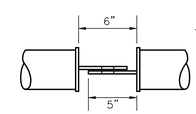

GATE LOCK SECTION VIEW
NOT TO SCALE

SECURITY GATE-DOUBLE (1)
NOT TO SCALE

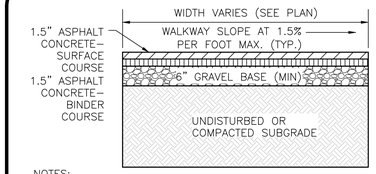

NOTES:
1. REFERENCE PLANS FOR ELEVATIONS.
2. COMPACT SOIL SUBGRADE UNIFORMLY TO AT LEAST 95% OF ASTM D 1557 LABORATORY DENSITY.
3. PROOF-ROLL PREPARED SUBGRADE TO IDENTIFY SOFT POCKETS AND AREAS OF EXCESS YIELDING. EXCAVATE SOFT SPOTS, UNSATISFACTORY SOILS, AND AREAS OF EXCESSIVE PUMPING OR RUTTING, AS DETERMINED BY GEOTECHNICAL ENGINEER AND REPLACE WITH COMPACTED BACKFILL OR FILL AS DIRECTED.
4. CONTRACTOR SHALL COORDINATE SURFACE, BINDER, AND BASE COURSES WITH GEOTECHNICAL OR SOILS REPORT. REFER TO REPORT FOR RECOMMENDATIONS FOR LOCAL SOILS OR DRAINAGE CONDITIONS AND/OR METHODS.
5. BASE COURSE SHALL EXTEND 6 INCHES BEYOND WALKWAY EDGE WHERE WALKWAY DOES NOT ABUT DEEP CURB, WALL, STEPS, OR FIXED OBJECT.
6. WALKWAY EDGES SHALL BE TAMPED WHERE WALKWAY DOES NOT ABUT DEEP CURB, WALL, STEPS, OR FIXED OBJECT.

BITUMINOUS WALKWAY (5)
NOT TO SCALE

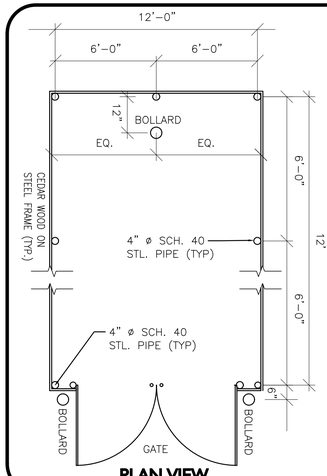

PLAN VIEW

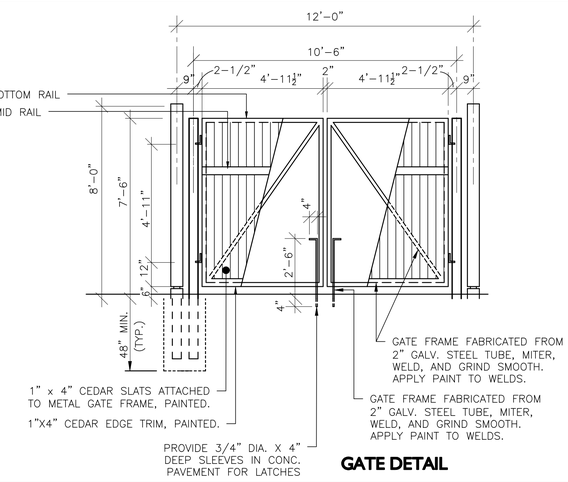

GATE DETAIL

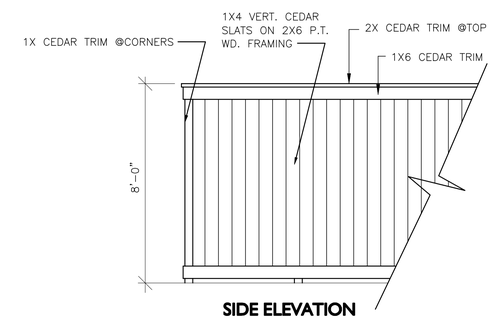

SIDE ELEVATION

NOTE:
PAINT ALL TRIM AND WOOD FRAMING TO MATCH CLOSEST ADJACENT BUILDING

SCREENED DUMPSTER ENCLOSURE (3)
NOT TO SCALE

NOTE:
TACK COAT – PROVIDE EMULSIFIED ASPHALT WHICH CONFORMS TO THE REQUIREMENTS OF THE STATE SPECIFICATIONS, DILUTED WITH ONE PART WATER TO ONE ONE PART ASPHALT FOLLOWING AASHTO M140/ASTM D997, OR AASHTO M208/ASTM D2397, SS-1H, CSS-1, OR CSS-1H.

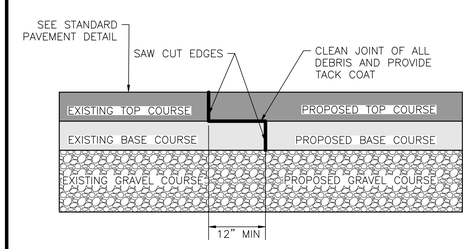

PAVEMENT KEY CUT (6)
NOT TO SCALE

BASIC INSTALLATION

STEP 3.1

Determine a time to install the mat/cable when equipment, heavy tools, and site traffic will be minimal to keep from possibly damaging the product. Be prepared to apply the surfacing courses over the mat/cable the same day so it will be protected from damage.

If installing mat/cable in the upper layer of a two-stage concrete slab or the upper layer of an asphalt application, the mat or cable should be completely ready for the second stage. There is limited time between stages, as the slab should not be allowed to fully cure or the asphalt to completely cool. Therefore, if using ProMelt Cable, you may want to lay it out and tie it to rewire that can be quickly lifted into place after the first stage is laid. This might also be preferable for a mat installation, although if mats are precut and shaped to the area, they generally can be rolled into place fairly quickly.

- If a slab sensor is installed in this second layer, plan ahead so this does not cause the first layer to cure or cool too much.
- Inspect the area and remove any sharp objects.

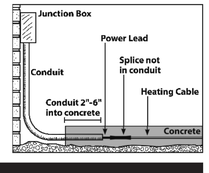

NOTICE
Install in temperatures at least 40°F (4.5°C).

Asphalt Application

If required, apply a prime coat to the first course or untreated base over the top of the cable.

Use 1/2" aggregate or smaller. Larger aggregate can cut or pinch the cable.

NOTICE
Before applying, ensure the asphalt temperature is not greater than 285°F (140°C).

Good compaction of the asphalt requires a certain temperature range of installation, depending on the type of asphalt being installed.

Manually lay the asphalt at the cable level.

NOTICE
Do not apply with asphalt machines as they may damage the cable.

Spread the asphalt so that no less than 1-1/2 inches and no more than 3 inches covers the top of the heating cables.

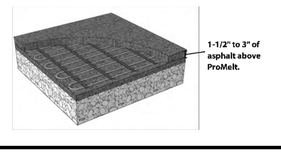

NOTES:
1. SNOW MELT SYSTEM TO BE WARMUP SNOW MELTING MATS, 3" CABLE SPACING, 37.5W PER SQ FT, 16.4' COLD LEAD, TWIN-CONDUCTOR HEATING CABLE 1/4"TH, 208V, COVERS 120 SQ FT – 2'W X 60'L, 21.7 AMPS AT 3-PHASE, 4507W OR APPROVED EQUAL.
2. VENDOR INFORMATION:
   WARMUP INC
   25-A FRANCIS J CLARKE CIRCLE
   BETHEL, CONNECTICUT 06801
   T: 888-927-6333
   WWW.WARMUP.COM
4. THE CONTRACTOR SHALL SUBMIT SHOP DRAWINGS AND ELECTRICAL DRAWINGS PREPARED AND ENDORSED BY A MA REGISTERED PROFESSIONAL ENGINEER, TO THE ENGINEER-OF-RECORD FOR APPROVAL AND TO THE TOWN FOR THEIR FILES.
5. SEE LAYOUT PLANS FOR LIMITS OF SNOW MELT SYSTEM

PAVEMENT SNOW MELT SYSTEM (6)
NOT TO SCALE

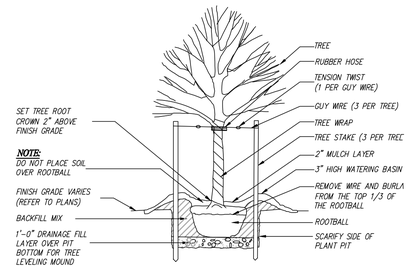

TREE PLANTING DETAIL (7)
NOT TO SCALE

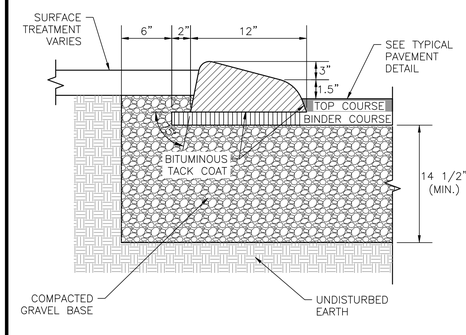

CAPE COD BERM (8)
NOT TO SCALE

APPROVAL UNDER SITE PLAN APPROVAL REQUIRED. SUBJECT TO A COVENANT TO BE RECORDED HEREWITH.

DATE: _____

LEICESTER PLANNING BOARD

I CERTIFY THAT NO NOTICE OF APPEAL WAS RECEIVED DURING THE TWENTY (20) RECORDING DAYS NEXT AFTER RECEIPT AND OF NOTICE FROM THE PLANNING BOARD OF THE APPROVAL OF THIS PLAN

TOWN CLERK, TOWN OF LEICESTER

COMMONWEALTH OF MASSACHUSETTS
MICHAEL A. MALYNOWSKI
CIVIL
No. 47269
REGISTERED PROFESSIONAL ENGINEER

Digitally signed by Michael Malynowski
Date: 2022.02.06 21:17:29 -05'00'

PROFESSIONAL ENGINEER FOR
ALLEN & MAJOR ASSOCIATES, INC.

REV	DATE	DESCRIPTION
4	02-07-22	MISC. REVISIONS PER TOWN COMMENTS
3	12-14-21	MISC. REVISIONS PER TOWN COMMENTS
2	11-10-21	MISC. REVISIONS PER TOWN COMMENTS
1	10-05-21	MISC. REVISIONS PER TOWN COMMENTS

APPLICANT:
MKEP 770 LLC
265 SUNRISE HIGHWAY, SUITE 1368
ROCKVILLE CENTER, NY 11570

PROJECT:
SKYVIEW ESTATES
RESIDENTIAL DEVELOPMENT
MAIN STREET
LEICESTER, MA

PROJECT NO.	2889-01	DATE:	09-17-21
SCALE:	AS SHOWN	DWG. :	C-2889-01_Details
DESIGNED BY:	SM	CHECKED BY:	MAM

PREPARED BY:
ALLEN & MAJOR ASSOCIATES, INC.
civil engineering ♦ land surveying
environmental consulting ♦ landscape architecture
www.allenmajor.com
100 COMMERCE WAY, SUITE 5
WOBURN MA 01801
TEL: (781) 935-6889
FAX: (781) 935-2896
WOBURN, MA ♦ LAKEVILLE, MA ♦ MANCHESTER, NH

THIS DRAWING HAS BEEN PREPARED IN DIGITAL FORMAT. CLIENT/CLIENT'S REPRESENTATIVE OR CONSULTANTS MAY BE PROVIDED COPIES OF DRAWINGS AND SPECIFICATIONS FOR HIS/HER INFORMATION AND/OR SPECIFIC USE ON THIS PROJECT. DUE TO THE POTENTIAL THAT THE PROVIDED INFORMATION MAY BE MODIFIED UNINTENTIONALLY OR OTHERWISE, ALLEN & MAJOR ASSOCIATES, INC. MAY REMOVE ALL INDICATION OF THE DOCUMENT'S AUTHORSHIP ON THE DIGITAL MEDIA. PRINTED REPRESENTATIONS OR PORTABLE DOCUMENT FORMAT OF THE DRAWINGS AND SPECIFICATIONS ISSUED SHALL BE THE ONLY RECORD COPIES OF ALLEN & MAJOR ASSOCIATES, INC.'S WORK PRODUCT.

DRAWING TITLE: DETAILS

SHEET No. C-507

Copyright © 2022 Allen & Major Associates, Inc. All Rights Reserved

R:\PROJECTS\2889-01\CIVIL\DRAWINGS\CURRENT\C-2889-01_DETAILS.DWG